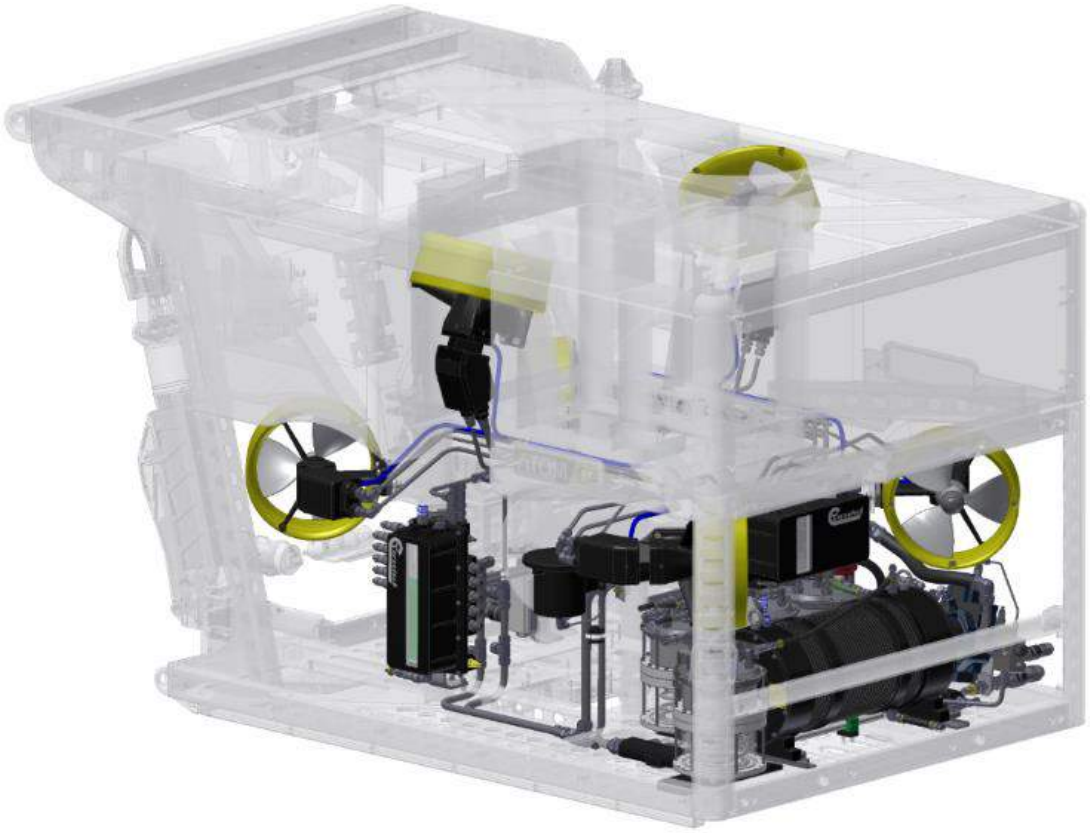

CURVETECH

SALES BROCHURE

Last Updated: 13-07-2017

Contents

THRUSTERS 4
SUBSEA ELECTRIC MOTORS (3kV+) 6
SUBSEA POWER UNITS 8
COMPENSATORS 11
HYDRAULIC VALVE PACKS 17
DISTRIBUTED SUBSEA CONTROL (DVECS II) 19
MULTI-FUNCTION VALVE PACK CONTROLLER CARD 20
THRUSTER SERVO CONTROLLER CARD 22
LIGHT CONTROLLER CARD 24
PT100 CONDITIONING CARD 26
SUBSEA ROTARY ENCODER 27
SUBSEA PROXIMITY SENSOR 28
VACUUM PORT 29
SUBSEA POWER SUPPLY UNIT 30
ROV DECK PACK 31
AX-VX GASKET REMOVAL TOOLS 33
WROV 28kW DIRTY WORK PACK 34
WROV JETTING SKID 35
WROV SCIENTIFIC SKID 37
WROV PIPELINE SURVEY SKID 39

Curvetech® is a registered Trade Mark of Soil Machine Dynamics Ltd.
© Soil Machine Dynamics Ltd 2017

All product and company names are trademarks™ or registered® trademarks of their respective holders. Use of them does not imply any affiliation with or endorsement by them.

CURVETECH

Subsea Components & Solutions

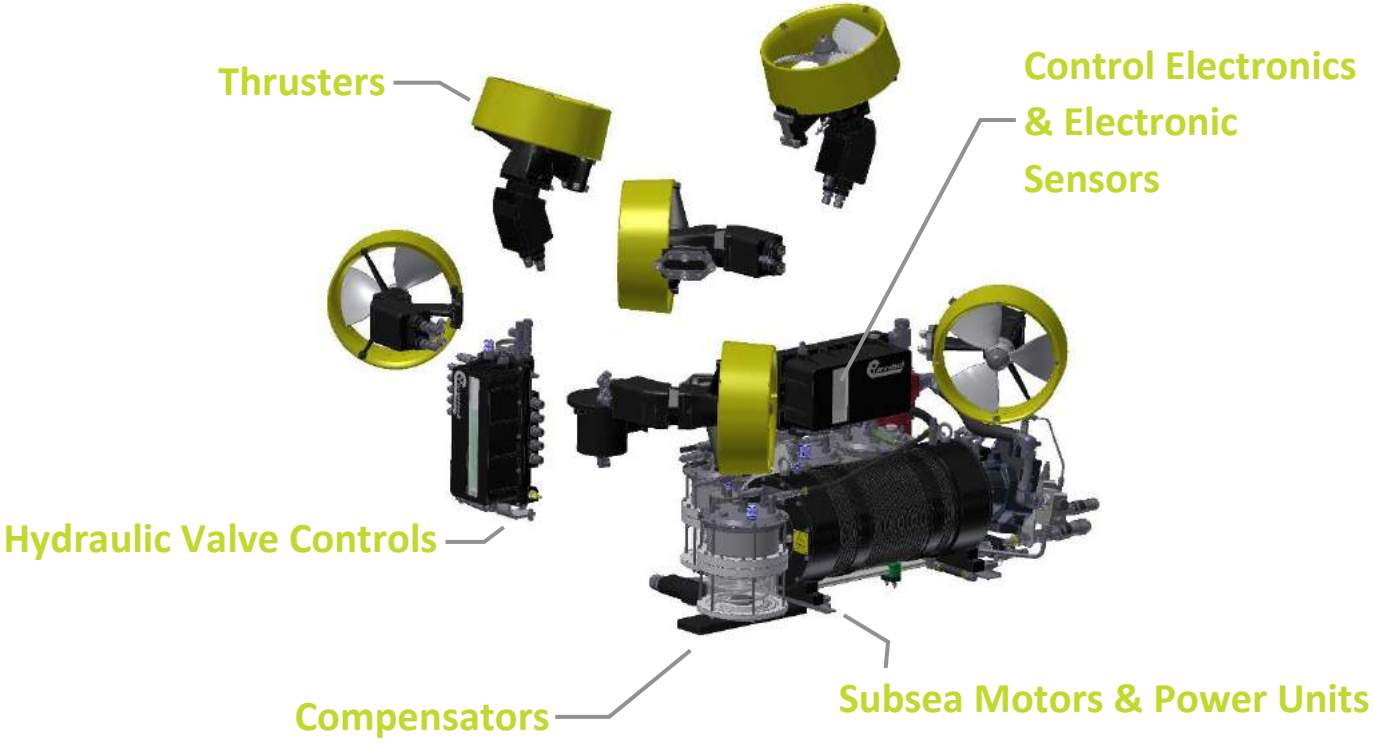

For all your subsea component needs

Curvetech® products are part of the Soil Machine Dynamics Ltd (SMD) family of products. With over 20 years knowledge and experience of providing integrated solutions for subsea and marine applications Curvetech® subsea components provide cost effective, rugged and reliable solutions for use with marine and subsea operators, system integrators and Original Equipment Manufacturers (OEMs). Covering a range of applications, the Curvetech® product range includes:

- Subsea vehicle propulsion systems
- Subsea motors and hydraulic power units
- Hydraulic valve control
- Compensators
- Control systems and surface high voltage power units
- Subsea sensors and electrical control cards
- Subsea tooling
- Work Class ROV skid units

For more information on our products or to obtain a sales quotation, technical drawings or 3D models please contact your local SMD Curvetech® Sales Office - visit www.smd.co.uk

THRUSTERS

SMD offer a range of hydraulic thrusters available for subsea vehicle propulsion applications. Curvetech® Thrusters incorporate well proven robust designs that have been used on work class ROVs for over twenty years and offer impressive performance with unparalleled reliability.

The latest HTE series thrusters are available in a range of sizes. The units are easy to maintain for minimal through life costs.

FEATURES

- Well proven robust design
- Asymmetric design provides near equal forward & reverse thrust
- Thrusters designed to minimise cavitation
- High efficiency motors
- Low through-life costs
- Optional thruster guards
- Optional speed sensor[1]

Part Number	Max Static Thrust @250 Bar/3626 PSI		Max Operating Pressure (Maximum Peak Pressure)		Propeller Diameter		Weight in Air		Motor Capacity	
	Kgf	lbf	Bar	PSI	mm	inch	kg	lbs	cm³/rev	Inch³/rev
HT_230BA[2]	200	440	350 (420)	5076 (6091)	230	9.0	14	30.9	10	0.6
HTE_300BA-23MK2	250	551	350 (400)	5076 (5801)	300	12.2	18	39.7	32	1.9
HTE_300BA-32MK2	350	771	350 (400)	5076 (5801)	300	12.2	18	39.7	32	1.9
HTE_380BA-32	370	815	350 (400)	5076 (5801)	380	15.0	27	59.5	32	1.9
HTE_390BA-32	310	683	350 (400)	5076 (5801)	390	15.4	27	59.5	32	1.9
HTE_390BA-45	440	970	350 (400)	5076 (5801)	390	15.4	27	59.5	45	2.7
HTE_430-63	540	1190	350 (400)	5076 (5801)	430	16.9	35	77.2	63	3.8
HTE_500BA	630	1388	250 (350)	3625 (5076)	500	19.7	51	112.4	81	4.9
HT_750BA-195[2]	1450	3196	350 (400)	5076 (5801)	750	29.5	175	385.8	180	10.9

Notes:

[1]Speed sensor option is available on request for HTE models only.

[2]Curvetech® HT Thrusters for SMD/Hydrovision legacy equipment.

ACCESSORIES

Part Number	Description
HTE_300BA-SP1	ASSEMBLY SPARES KIT - SEALS THRUSTER HTE_300-380-430
HTE_300BA-SP2	ASSEMBLY SPARES KIT -BEARINGS THRUSTER HTE_300-380-430
HTE-300BA-SP3	ASSEMBLY THRUSTER MAINTENANCE TOOL KIT
HTE_500BA-SP1	ASSEMBLY SPARES KIT -SEALS THRUSTER HTE_500
HTE_500BA-SP2	ASSEMBLY SPARES KIT -BEARINGS THRUSTER HTE_500

SPECIFICATIONS

HT_230BA

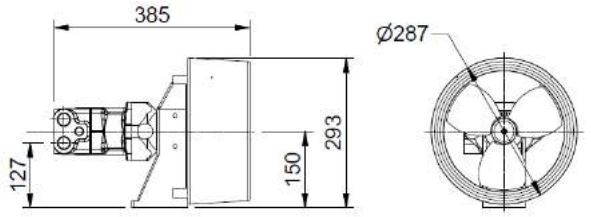

HTE_430-63

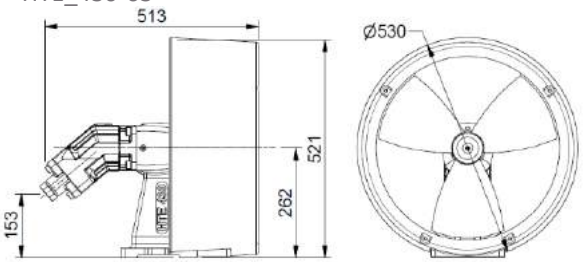

HTE_300BA-23MK2 / HTE_300BA-32MK2

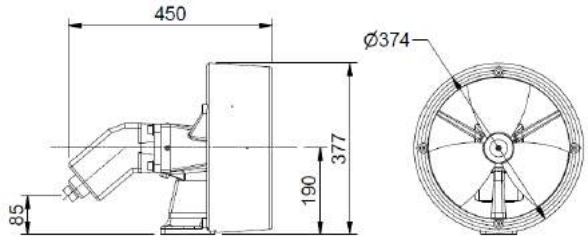

HTE_500BA

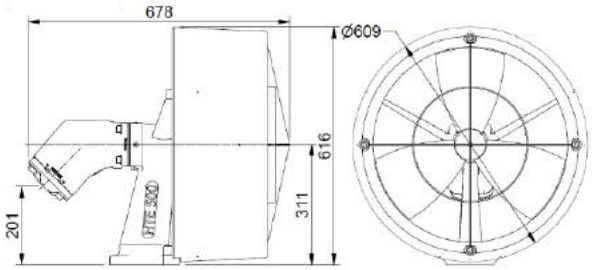

HTE_380BA-32

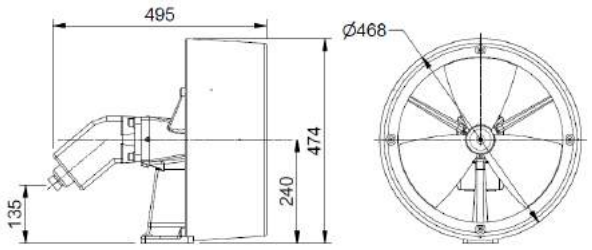

HTE_390BA-32

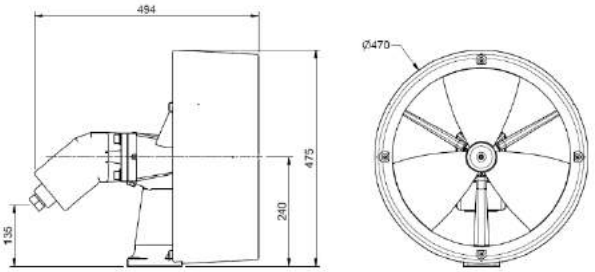

HTE_390BA-45

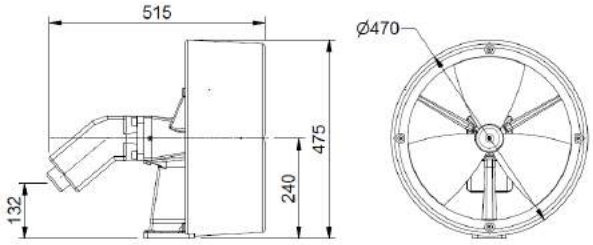

HT_750BA-195

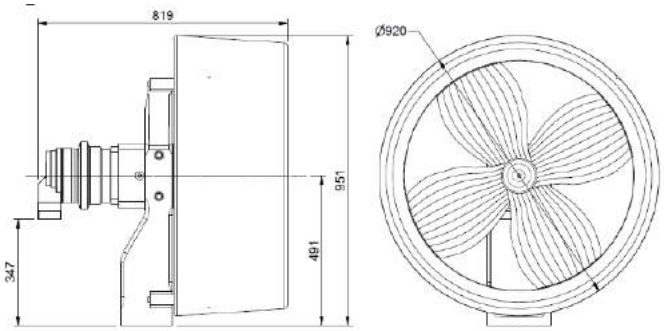

Note! Images shown are not to scale and are for information purposes only.

SUBSEA ELECTRIC MOTORS (3kV+)

SMD offer a range of oil filled submersible high voltage electric motors suitable for hydraulic power generation or running a variety of water pumps. The units are designed for work class ROVs, trenchers, ploughs, dredge systems and other customer design applications which demand long term reliability and high performance subsea. Aluminium or stainless steel versions are available and customers can choose from a range of electrical connector options. Curvetech® hydraulic motor units are dual-ended and can interface with a range of industry standard pumps. Alternatively SMD can provide a fully integrated subsea power unit with pump units fitted – please refer to the Curvetech® Subsea Power Unit datasheet for further details.

Each unit is tested and certified to run at full power for prolonged periods of time. This is achieved using a unique winding technique which ensures cooler operation. Built in sensors monitor winding temperature as opposed to oil temperature and all motors incorporate oversized bearings for smooth concentric running.

FEATURES

- 3kV High voltage windings for optimum subsea operation
- Adaptable for use with industry standard hydraulic & water pumps
- Internal oil cooled with external housing cooling ribs
- 2 year warranty as standard
- Optional surface power distribution equipment for ease of surface control system integration

ELECTRICAL SPECIFICATIONS

Part Number	Power		Poles	Frequency Hz	Speed RPM	Voltage	Connector[2]
	SHP	kW					
AF0062	11.5	8.5	4	50 / 60	1450 / 1750	2400 / 3000	Burton
AJ3256	20	15	4	50 / 60	1450 / 1750	2400 / 3000	Burton
AJ3029	29	22	4	50 / 60	1450 / 1750	2400 / 3000	Burton
AJ9867	60	45	2	50 / 60	2900 / 3500	2400 / 3000	Burton
AJ9869	100	75	2	50 / 60	2900 / 3500	2400 / 3000	Burton
AG9602	125	93	4	50 / 60	1450 / 1750	2400 / 3000	Burton
AJ9871	150	110	2	50 / 60	2900 / 3500	2400 / 3000	Burton
AJ2139	200 (250*)	150 (186*)	4	50 / 60	1450 / 1750	2400 / 3000	Burton
AD6654	300	225	4	50 / 60	1450 / 1750	2400 / 3000	5m Harness
AH2874	400	300	4	50 / 60	1450 / 1750	2400 / 3000	Burton
AH8703	535	400	4	50 / 60	1450 / 1750	2400 / 3000	Burton

*Boost mode

MECHANICAL SPECIFICATIONS

Part Number	Weight in Air		Length (L)		Width (W)		Height (H)		Mounting Bolt Centres (MBC)		Mounting Centre (A)	
	kg	lbs	mm	in	mm	in	mm	in	mm	in	mm	in
AF0062	119	263	512	20.2	274	10.8	355	14.0	532	21.0	130	5.1
AJ3256	80	177	485	19.1	283	11.2	294	11.6	426	16.8	170	6.7
AJ3029	88	194	515	20.3	283	11.2	294	11.6	456	18.0	170	6.7
AJ9867	126	278	520	20.5	320	12.6	398	15.7	460	18.1	272	10.7
AJ9869	186	410	685	27.0	320	12.6	398	15.7	590	23.2	272	10.7
AG9602	240	529	871	34.3	310	12.2	310	12.2	829	32.6	230	9.1
AJ9871	233	514	610	24.1	395	15.6	458	18.0	550	21.7	140	5.5
AJ2139	384	847	832	32.8	374	14.8	486	19.1	912	35.9	270	10.6
AD6654	742	1636	860	1896	562	22.2	617	24.3	860	33.9	440	17.4
AH2874	748	1649	1000	39.4	533	21.0	612	24.1	627	24.7	391	15.4
AH8703	2179	4804	1363	53.7	580	22.8	690	27.2	1463	57.6	452	17.8

Notes:

[1]Refer to general arrangement drawings for further details.
[2]Burton connectors supplied as standard – other connector configurations can be supplied on request.

SURFACE CONTROL ACCESSORIES

Part Number	Description
AJ5407	Assembly LVPDU Low Power (≤75kW, 440VAC)
AJ5408	Assembly LVPDU Low Power (≤75kW, 440VAC) & TMS
AJ5409	Assembly LVPDU High Power (>75kW to 150kW, 440VAC)
AJ5410	Assembly LVPDU Low Power (>75kW to 150kW, 440VAC) & TMS
AJ5401	Assembly HVPDU Low Power (≤75kW, 440VAC)
AJ5402	Assembly HVPDU Low Power (≤75kW, 440VAC) & TMS
AJ5403	Assembly HVPDU High Power (>75kW to 150kW, 440VAC)
AJ5404	Assembly HVPDU Low Power (>75kW to 150kW, 440VAC) & TMS
To suit system	DVECSII Control System

SUBSEA POWER UNITS

SMD offer a range of oil filled submersible power packs suitable for hydraulic power generation or running a variety of water pumps. The units are designed for work class ROVs, trenchers, ploughs, dredge systems and other customer design applications which demand long term reliability and high performance subsea. Aluminium or stainless steel versions are available and customers can choose from a range of electrical connector options. Curvetech® Power Units are dual-ended and can interface with a range of industry standard pumps mounted on one or both ends of the unit.

Each unit is tested and certified to run at full power for prolonged periods of time. This is achieved using a unique winding technique which ensures cooler operation. Built in sensors monitor winding temperature as opposed to oil temperature and all motors incorporate oversized bearings for smooth concentric running.

FEATURES

- 3kV High voltage windings for optimum subsea operation
- Highly configurable pump options available (single, double and through drive)
- Adaptable for use with industry standard hydraulic & water pumps
- Internal oil cooled with external housing cooling ribs
- 2 year warranty as standard
- Optional DVECSII surface control equipment

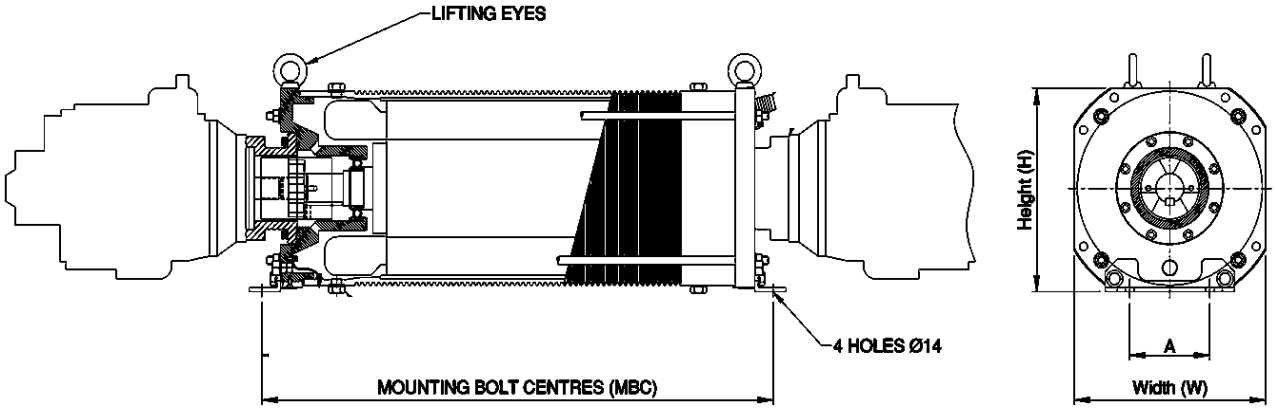

ELECTRICAL SPECIFICATIONS

Part Number	Power		Poles	Frequency Hz	Speed RPM	Voltage	Connector
	SHP	kW					
AF0035	11.5	8.5	4	50 / 60	1450 / 1750	2400 / 3000	Burton
AG2106	11.5	8.5	4	50 / 60	1450 / 1750	2400 / 3000	Seacon
AA9962	11.5	8.5	4	50 / 60	1450 / 1750	2400 / 3000	Impulse
AJ3255	20	15	4	50 / 60	1450 / 1750	2400 / 3000	Burton
AJ3030	29	22	4	50 / 60	1450 / 1750	2400 / 3000	Burton
AD8190	29	22	4	50 / 60	1450 / 1750	2400 / 3000	Seacon
AC8830	60	45	2	50 / 60	2900 / 3500	2400 / 3000	Burton
AE6464	100	75	2	50 / 60	2900 / 3500	2400 / 3000	Burton
AG9601	125	93	4	50 / 60	1450 / 1750	2400 / 3000	Burton
AH9640	150	110	2	50 / 60	2900 / 3500	2400 / 3000	Burton
AJ2138	200 (250*)	150 (186*)	4	50 / 60	1450 / 1750	2400 / 3000	Burton
AD6653	300	225	4	50 / 60	1450 / 1750	2400 / 3000	5m Harness
AH4541	400	300	4	50 / 60	1450 / 1750	2400 / 3000	Burton
AF5658	535	400	4	50 / 60	1450 / 1750	2400 / 3000	Burton

*Boost Mode

MECHANICAL SPECIFICATIONS

Part Number	Motor & Pump Weight in Air		Motor & Pump Length (L)		Motor & Pump Width (W)		Motor & Pump Height (H)		Mounting Bolt Centres (MBC)		Mounting Centre (A)	
	kg	lbs	mm	in	mm	in	mm	in	mm	in	mm	in
AF0035	126	278	761	30.0	283	11.1	355	14.0	532	21.0	130	5.1
AG2106	126	278	761	30.0	283	11.1	355	14.0	532	21.0	130	5.1
AA9962	126	278	761	30.0	283	11.1	355	14.0	532	21.0	130	5.1
AJ3255	103	227	710	28.0	283	11.1	294	11.6	426	16.8	170	6.7
AJ3030	110	243	740	29.1	283	11.1	294	11.6	456	18.0	170	6.7
AD8190	84	185	773	30.4	288	11.3	326	12.8	456	18.0	170	6.7
AC8830	146	322	731	28.8	320	12.6	398	15.7	460	18.1	272	10.7
AE6464	210	463	950	37.4	336	13.3	398	15.7	590	23.2	272	10.7
AG9601	240	529	1208	47.6	310	12.2	310	12.2	829	32.6	230	9.1
AH9640	278	613	1135	44.7	395	15.6	458	18.0	550	21.7	140	5.5
AJ2138	560	1235	1609	63.4	383	15.1	486	19.1	912	35.9	270	10.6
AD6653	1135	2503	2525	99.4	562	22.2	617	24.3	860	33.9	440	17.4
AH4541	1060	2337	2138	84.2	508	20.0	583	23.0	627	24.7	393	15.5
AF5658	1575	3473	3434	135.2	520	20.5	610	24.0	1005	39.6	468.2	18.4

Notes:

[1]Refer to general arrangement drawings for further details.

HYDRAULIC SPECIFICATIONS

Part Number	Main Pump 1				Main Pump 2				Notes
	Type	cc	Nominal / Peak Pressure (Bar)	Max Flow (LPM)	Type	cc	Nominal / Peak Pressure (Bar)	Max Flow (LPM)	
AF0035	A10VSO[1]	18cc	280 / 350	31.5	-	-	-	-	
AG2106	A10VSO[1]	18cc	280 / 350	31.5	-	-	-	-	
AA9962	A10VSO[1]	18cc	280 / 350	31.5	-	-	-	-	
AJ3255	MPV/R-01[2]	28cc	300 / 350	49.0	-	-	-	-	
AJ3030	MPV/R-01[2]	28cc	300 / 350	49.0	-	-	-	-	
AD8190	A10VSO[1]	32cc	280 / 350	56.0	-	-	-	-	
AC8830	MPV/R-01[2]	28cc	300 / 350	98.0	-[3]	-	-	-	
AE6464	A7VO[1]	55cc	350 / 400	137.0	-[3]	-	-	-	
AG9601	A10VSO[1]	140cc	280 / 350	245.0	-[3]	-	-	-	
AH9640	A7VO[1]	55cc	350 / 400	180.0	MPV/R-01[2]	28cc	300 / 350	93.0	
AJ2138	K3VL[4]	200cc	320 / 350	350.0	K3VL[4]	140cc	320 / 350	245.0	Integrated motor cooling
AD6653	90R139	130cc	420 / 450	225.0	90L180[5]	180cc	420 / 450	315.0	Integrated motor cooling and boost pumps – please refer to GA drawing for more details
	90R180	180cc	420 / 450	315.0	90L180[5]	180cc	420 / 450	315.0	
AH4541	90L180[5]	180cc	420 / 450	315.0	90L180[5]	180cc	420 / 450	315.0	Integrated motor cooling
AF5658	90L180[5]	180cc	420 / 450	315.0	90L180[5]	180cc	420 / 450	315.0	LHS has 4x pumps in total including additional 1x55cc & 1x 17cc pumps
	90L180[5]	250cc	420 / 450	437.5	90L180[5]	130cc	420 / 450	315.0	RHS has 3x pumps in total including additional 1x18cc pump

Notes:

[1]Bosch Rexroth
[2]Linde
[3]Blanking plate provided for use with 3rd party pump
[4]Kawasaki
[5]Sauer Danfoss
[6]Standard pump options shown. Alternative pump arrangements can be provided to meet customer specific requirements.

PUMP CONTROL UNITS

Part Number	Description
AJ5407	Assembly LVPDU Low Power (≤75kW, 440VAC)
AJ5408	Assembly LVPDU Low Power (≤75kW, 440VAC) & TMS
AJ5409	Assembly LVPDU High Power (>75kW to 150kW, 440VAC)
AJ5410	Assembly LVPDU Low Power (>75kW to 150kW, 440VAC) & TMS
AJ5401	Assembly HVPDU Low Power (≤75kW, 440VAC)
AJ5402	Assembly HVPDU Low Power (≤75kW, 440VAC) & TMS
AJ5403	Assembly HVPDU High Power (>75kW to 150kW, 440VAC)
AJ5404	Assembly HVPDU Low Power (>75kW to 150kW, 440VAC) & TMS

COMPENSATORS

With over 20 years of subsea manufacturing experience SMD can offer a range of Curvetech® compensators from a wide range of field proven reliable configurations. All Curvetech® compensators are designed for long-term reliability, simplicity and ease of use.

Monitoring vehicle oil condition is crucial during operations to ensure that the vehicle is functioning correctly. Entrained air, milky looking oil or even small items of debris within the oil are early warning signs that something is amiss with the machine and needs assessment. Capturing these issues early can significantly reduce consequential damage to other hydraulic components within the system. Curvetech® compensators (2.75l, 3l & 6l) have been designed with 100% visually clear windows allowing operators to easily view the oil condition. Industry standard and high reliability Rota transducers are also available and are retrofitable to all compatible units. Integrated relief valves and air bleed points are included on the majority of Curvetech® compensator units and rolling diaphragms ensure no sliding seal surfaces for ultimate system integrity. Curvetech® compensators are compatible with mineral oils and HEES oils as standard – for other oil types please enquire.

Optional mounting kits are also available which allow reduced swap-out time - quick mounting and replacement of compensators is achieved via a single bolt whilst keeping them rigidly mounted to the vehicle for operations.

FEATURES

- Range of standard sizes
- Range of spring rates
- Simple & rugged construction
- Easy maintenance
- Available with analogue alarms for continual monitoring
- Customisation service to suit client requirements

EV_4006-xx (6 Litre)

EV_4007-xx (3 Litre)

EV_4003-xx (2.75 Litre)

COMPENSATOR SIZES & VARIANTS[1]

Part Number	Capacity		Pressure at Empty		Pressure at Full		Transducer	Connector	Connector Spec	Free Port Details
	l	pt	Bar	PSI	Bar	PSI				
EV_4002-xx	0.50	0.88	0.13	1.9	0.57	8.3	No	Low level alarm kit option Part Number EV_4012-1		1 x 1/4"BSP & 1 x 3/8"BSP
			0.17	2.5	0.34	5.0				
EV_4001-xx	1.5	2.64	0.24	3.5	0.88	12.8	No	Level sensors and alarm kit options. (i.e. EV_4011-1) Contact SMD for options		1/2" NPT
			0.12	1.7	0.44	6.4				
			0.08	1.2	0.29	4.3				
EV_4003-xx	2.75	4.84	0.17	2.5	0.34	5.0	No	None	None	5 x 9/16"UNF
								Subconn / Impulse	MCBH3M	
			0.40	6.0	0.80	12.0			MCBH8FSS	
							Yes		MHDG-9-BCR	3 x 7/16"UNF & 2 x 9/16"UNF
			1.00	14.5	2.00	29.0		Seacon	5507-1508	
								Burton	5507-1508	
EV_4007-xx	3.00	5.28	0.23	3.3	0.41	5.9	No	None	None	5 x 3/8"BSP
								Subconn / Impulse	MCBH3M	
			0.90	13.1	1.60	23.2	Yes	Burton	5507-1508	5 x 9/16"-18 (SAE #6)
								Seacon	5507-1508	
										3 x 1/2"BSP & 2 x 3/4"BSP
EV_4006-xx	6.00	10.56	0.07	1.0	0.41	6.0	No	None	None	3 x 1/2"BSP & 2 x 3/4"BSP
			0.14	2.0	0.83	12.0		Subconn / Impulse	MCBH3M	5 x UNF 9/16"-18 (SAE#6)
			0.25	3.6	1.67	24.2	Yes	Burton	5507-1508	2 x 3/4"BSP & 2 x 3/8"BSP & 3 x 1/4"BSP
								Seacon	5507-1508	2 x 3/4"BSP & 2 x 3/8"BSP & 3 x 1/4"BSP & 1x1" SAE3000
Larger capacity (11 - 100 Litre) versions are available on request										

Notes:

[1]See following table for standard compensator assemblies.

[2]Customised compensators can also be provided to suit specific customer requirements subject to minimum order values.

EV_4002-1 MK-2 0.5L

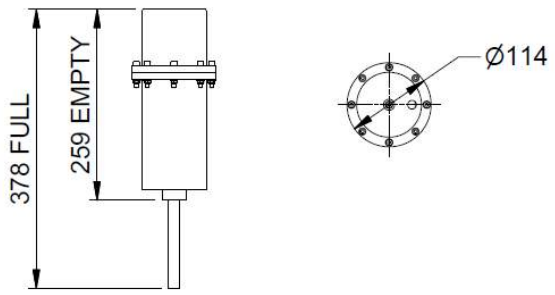

EV_4007-1 3.0L

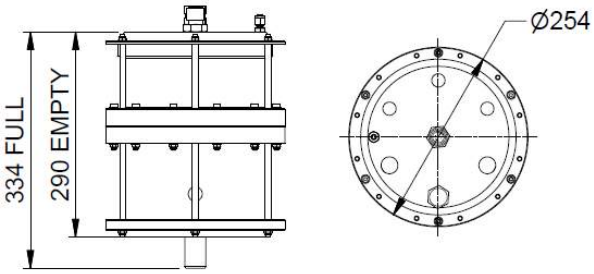

EV_4001-2 1.5L

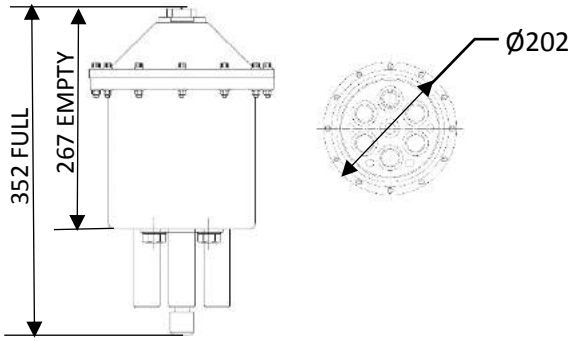

EV_4006-7 6.0L

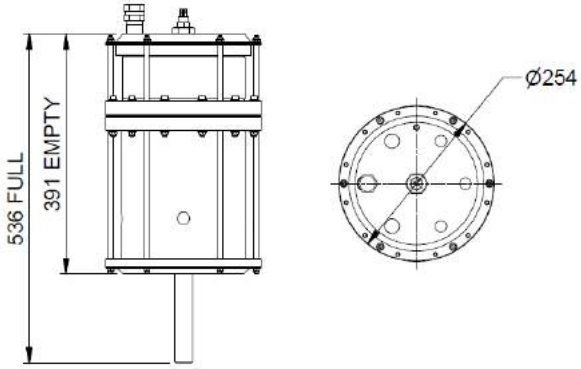

EV_4003-31 2.75L

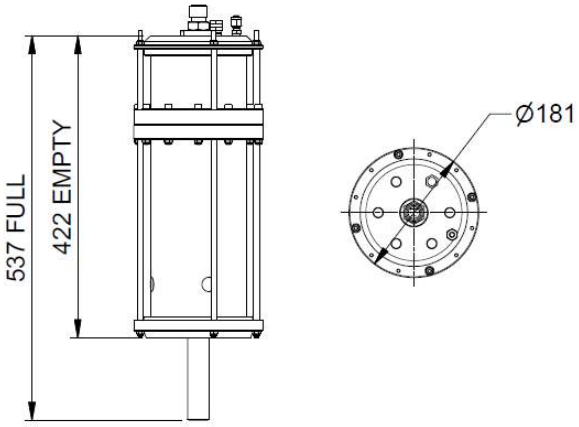

EV_4010-7 10.0L

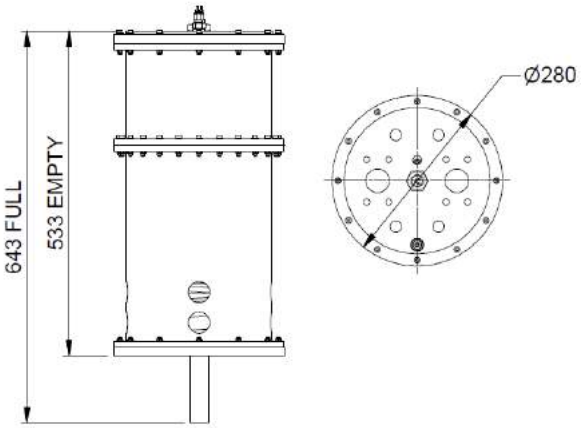

EV_4032-1 45.0L

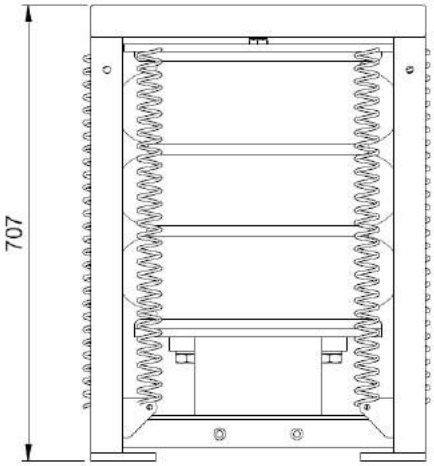

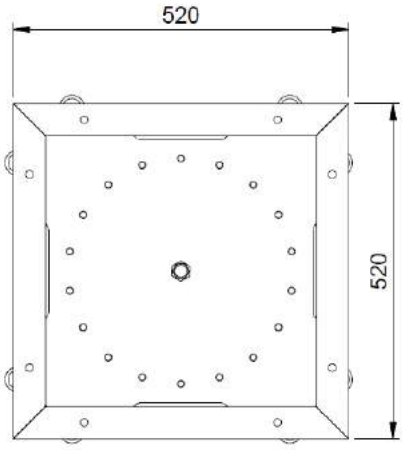

EV_4030-1 45.0L

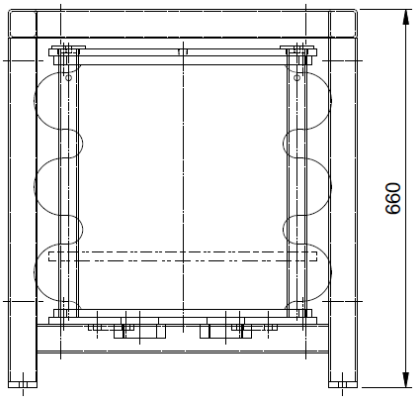

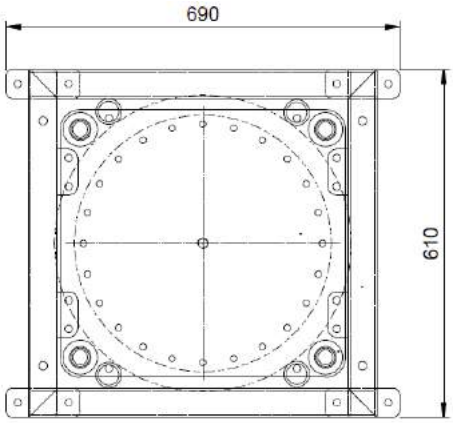

EV_4031-1 100.0L

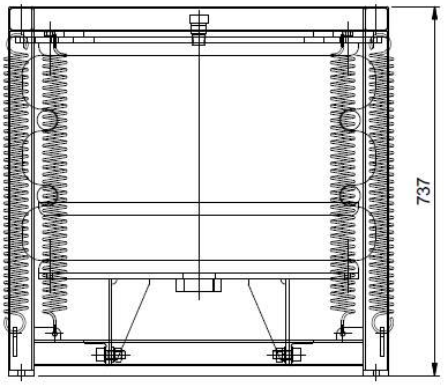

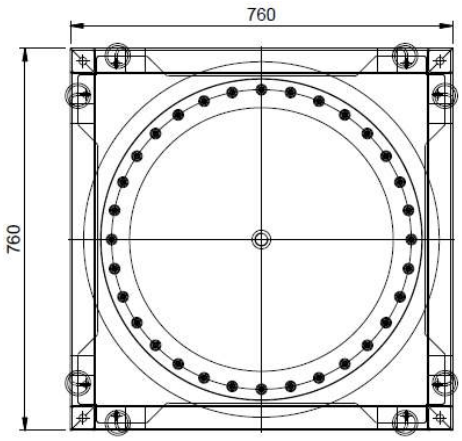

Note! Images shown are not to scale and are for information purposes only

STANDARD COMPENSATOR PART NUMBERS & SPECIFICATIONS

Part Number	Capacity		Pressure at Empty		Pressure at Full		Transducer	Connector	Connector Spec	Free Port Details[1]
	l	pt	Bar	PSI	Bar	PSI				
EV_4002-1 Mk-2	0.50	0.88	0.13	1.9	0.57	8.3	-	-	-	1 x 1/4"BSP & 1 x 3/8"BSP
EV_4002-8 Mk-2	0.50	0.88	0.17	2.5	0.34	5.0	-	-	-	1 x 1/4"BSP & 1 x 3/8"BSP
EV_4001-2	1.5	2.64	0.24	3.5	0.88	12.8	√	-	-	1/2" NPT
EV_4001-3	1.5	2.64	0.12	1.7	0.44	6.4	√	-	-	1/2" NPT
EV_4001-4	1.5	2.64	0.08	1.2	0.29	4.3	√	-	-	1/2" NPT
EV_4003-28	2.75	4.84	0.17	2.5	0.34	5.0	√	Subconn / Impulse	MCBH3M	5 x 9/16"UNF
EV_4003-29	2.75	4.84	0.17	2.5	0.34	5.0	-	-	-	5 x 9/16"UNF
EV_4003-30	2.75	4.84	0.40	6.0	0.80	12.0	√	Subconn / Impulse	MCBH3M	5 x 9/16"UNF
EV_4003-31	2.75	4.84	0.17	2.5	0.34	5.0	√	Burton	5507-1508	5 x 9/16"UNF
EV_4003-32	2.75	4.84	1.00	14.5	2.00	29.0	√	Burton	5507-1508	5 x 9/16"UNF
EV_4003-33	2.75	4.84	0.17	2.5	0.34	5.0	√	Subconn / Impulse	MCBH8FSS	5 x 9/16"UNF
EV_4003-34	2.75	4.84	1.00	14.5	2.00	29.0	√	Subconn / Impulse	MCBH8FSS	5 x 9/16"UNF
EV_4003-35	2.75	4.84	1.00	14.5	2.00	29.0	√	Seacon	5507-1508	5 x 9/16"UNF
EV_4003-36	2.75	4.84	1.00	14.5	2.00	29.0	-	-	-	5 x 9/16"UNF
EV_4003-38	2.75	4.84	0.17	2.5	0.34	5.0	√	Seacon	5507-1508	5 x 9/16"UNF
EV_4003-39	2.75	4.84	0.17	2.5	0.34	5.0	√	Subconn / Impulse	MHDG-9-BCR	3 x 7/16"UNF & 2 x 9/16"UNF
EV_4003-41	2.75	4.84	0.17	2.5	0.34	5.0	√	Subconn / Impulse	MHDG-9-BCR	3 x 7/16"UNF & 2 x 9/16"UNF
EV_4007-1	3.00	5.28	0.90	13.1	1.60	23.2	√	Burton	5507-1508	3 x 1/2"BSP & 2 x 3/4"BSP
EV_4007-2	3.00	5.28	0.23	3.3	0.41	5.9	√	Burton	5507-1508	5 x 3/8"BSP
EV_4007-3	3.00	5.28	0.90	13.1	1.60	23.2	√	Subconn / Impulse	MCBH3M	3 x 1/2"BSP & 2 x 3/4"BSP
EV_4007-4	3.00	5.28	0.23	3.3	0.41	5.9	√	Subconn / Impulse	MCBH3M	5 x 3/8"BSP
EV_4007-5	3.00	5.28	0.23	3.3	0.41	5.9	√	Seacon	5507-1508	5 x 9/16"-18 (SAE #6)
EV_4006-7	6.00	10.56	0.14	2.0	0.83	12.0	√	Subconn / Impulse	MCBH3M	3 x 1/2"BSP & 2 x 3/4"BSP
EV_4006-8	6.00	10.56	0.14	2.0	0.83	12.0	√	Subconn / Impulse	MCBH3M	2 x 3/4"BSP & 2 x 3/8"BSP & 3 x 1/4"BSP & 1x1" SAE3000
EV_4006-9	6.00	10.56	0.25	3.6	1.70	24.7	√	Subconn / Impulse	MCBH3M	3 x 1/2"BSP & 2 x 3/4"BSP
EV_4006-11	6.00	10.56	0.14	2.0	0.83	12.0	-	-	-	3 x 1/2"BSP & 2 x 3/4"BSP
EV_4006-12	6.00	10.56	0.07	1.0	0.41	6.0	√	Seacon	5507-1508	3 x 1/2"BSP & 2 x 3/4"BSP
EV_4006-13	6.00	10.56	0.14	2.0	0.83	12.0	√	Burton	5507-1508	2 x 3/4"BSP & 2 x 3/8"BSP & 3 x 1/4"BSP & 1x1" SAE3000
EV_4006-15	6.00	10.56	0.14	2.0	0.83	12.0	√	Subconn / Impulse	MCBHFSS	2 x 3/4"BSP & 2 x 3/8"BSP & 3 x 1/4"BSP
EV_4006-16	6.00	10.56	0.25	3.6	1.67	24.2	√	Burton	5507-1508	3 x 1/2"BSP & 2 x 3/4"BSP
EV_4006-17	6.00	10.56	0.14	2.0	0.83	12.0	√	Seacon	5507-1508	2 x 3/4"BSP & 2 x 3/8"BSP & 3 x 1/4"BSP & 1x1" SAE3000
EV_4006-18	6.00	10.56	0.07	1.0	0.41	6.0	√	Burton	5507-1508	3 x 1/2"BSP & 2 x 3/4"BSP

Part Number	Capacity		Pressure at Empty		Pressure at Full		Transducer	Connector	Connector Spec	Free Port Details[1]
	l	pt	Bar	PSI	Bar	PSI				
EV_4006-19	6.00	10.56	0.25	3.6	1.67	24.2	-	-	-	3 x 1/2"BSP & 2 x 3/4"BSP
EV_4006-20	6.00	10.56	0.07	1.0	0.41	6.0	✓	Seacon	5507-1508	5 x UNF 9/16"-18 (SAE#6)
EV_4006-21	6.00	10.56	0.25	3.6	1.67	24.2	✓	Seacon	5507-1508	3 x 1/2"BSP & 2 x 3/4"BSP

ACCESSORIES

Accessory		Suitable For Compensators				
Part Number	Description	EV_4002-xx	EV_4001-xx	EV_4003-xx	EV_4007-xx	EV_4006-xx
EV_4012-1	Assembly Kit 1PT Compensator Empty Indicator c/w whip	✓	-	-	-	-
AK1464	Compensator Mounting Kit	-	✓	-	-	-
AK1472	Compensator Fill Point, 30psi Relief and Outlet	-	✓	-	-	-
EV_4001-SP	Seal Kit	-	✓	-	-	-
AJ7395	Compensator Spring Compression Tool Kit	-	-	✓	✓	✓
AJ9084	Compensator (Single Spring) Mounting Kit	-	-	✓	-	-
AJ9157	Compensator (Dual Spring) Mounting Kit	-	-	✓	-	-
EV_4003-SP MK2	Seal Kit	-	-	✓	-	-
AJ9085	Compensator Quick Mounting Kit	-	-	-	✓	✓
EV_4006-SP MK2	Seal Kit	-	-	-	✓	✓
AK1679	Compensator Fill Unit (Bug Bottle)	✓	✓	✓	✓	✓
AK0722	Tool Oil Transfer Pump and Filter	15lpm maximum flow rate – can be used for filling of large compensation volumes. Maximum fill level 80% of compensator volume.				

Compensator Spring Compression Tool Kit

HYDRAULIC VALVE PACKS

Curvetech® Hydraulic Valve Packs from SMD are available equipped with solenoid, or servo controlled valves. A varying number of functions, flow rates and pressures can be offered by these lightweight and compact components. All packs include internal valve drive electronics addressed using a RS485 communication protocol (details available). Diagnostic LEDs are visible through the clear polycarbonate valve manifold cover.

FEATURES

- 2, 4, 6, 8 & 12 function versions available
- Variety of valve types & configurations
- Built-in drive electronics
- Integrated temperature, moisture & pressure sensors

iTCU – 6-Channel Thruster Control Unit

iTCU – 7-Channel Thruster Control Unit

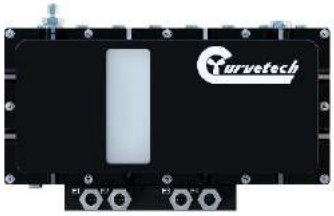

iTCU – 8-Channel Thruster Control Unit

iHCU 12-Station

iHCU 10-Station

iHCU 6-Station

iHCU 4-Station Hi Flow

iHCU 2-Station Hi Flow

STANDARD THRUSTER CONTROL UNIT SPECIFICATIONS

Part Number	No. of Thruster Controls	Integrated Pump control	Flow		Electrical	
			LPM	GPM	Connectors[1]	Std. Comms.
AH4324	6	✓	57	12.54	Input – Burton I/O – 3x Burton	RS485
AH6631	7	✓	57	12.54	Input – Burton I/O – 3x Burton	RS485
AJ3965	8	✓	57 / 114	12.54 / 25.08	Input – Burton I/O – 3x Burton	RS485

STANDARD HYDRAULIC CONTROL UNIT SPECIFICATIONS

Curvetech® Hydraulic Control Units (HCU's) are used for control of the majority of vehicle hydraulic functions where the extremely high accuracy of a servo valve isn't required. System control and accuracy is still very good and typical applications include manipulator arm control, tooling, hydraulic cylinder actuation and hydraulic camera pan & tilt units.

Part Number	Valve Setup[2,3]	Adjustable Flow Controls	Flow		Electrical	
			LPM	GPM	Connectors[1]	Std. Comms.
AG1372	12 x NG3 See options below for population	12 x Optional Externally adjustable	15	4	Input – Burton I/O – 4x Burton	RS485
AG4676	10 x NG3 See options below for population	10 x Optional Externally adjustable	10	2.20	Input – Burton I/O – 4x Burton	RS485
AD7011	6 x NG3 See options below for population	6 x Optional Externally adjustable	10	2.2	Input – Burton I/O – 4x Burton	RS485
AF8838	4	2x NG6 / 2x 100 LPM cartridge	35 / 95	7.70 / 20.90	Burton	RS485
AG4713	2	2x 100 LPM cartridge	95	20.90	Burton	RS485
For higher flow rate units or custom functions please contact SMD and we can advise further.						

Notes:

[1]Standard connector types shown – alternative connectors can be accommodated on request (e.g. Impulse, Seacon).
[2]Number of positions for proportional or on/off valves.
[3]Combinations of valve sizes and configurations can be provided on request.
[4]Images shown are not to scale and are for information purposes only. Please refer to drawing for dimensions and further detailed information.

ADDITIONAL VALVE CONFIGURATIONS FOR HCU STACKS

Combinations of these stacks can be used to build the complete valve pack, depending on the required functionality. Some valve-packs also contain additional functionality. Refer to the valve pack hydraulic schematic for additional functions. If in doubt consult Curvetech® technical team for further advice.

Part Number	Description	Schematic	Notes
AF1068	Assembly mini 3 DIR+PO+Flow / DOF	See drawing CD0977-VER-001	
AF1069	Assembly mini 3 DIR+Flow / DF	See drawing CD0977-VER-001	
AF1072	Assembly mini 3 Prop / P	See drawing CD0977-VER-001	
AF2307	Assembly Prop Pressure Relief Valve	See drawing CD0977-VER-001	Typically used to control pump load.
Alternative valves and combinations are available upon special request			

DISTRIBUTED SUBSEA CONTROL (DVECS II)

The SMD Curvetech® Distributed Vehicle Control System (DVECS II) is a powerful reliable control package designed for controlling remote robotic subsea systems. DVECS II excels when controlling hydraulic devices, instrumentation or cameras such as those found on complex work class ROVs, ploughs and trenchers. DVECS II boasts a full suite of user programmable functions in addition to real-time diagnostic monitoring. The package can be engineered to suit any customer application, including newly built or upgraded ROV or similar subsea systems.

TOPSIDE COMMUNICATIONS

- DVECS control SCADA software/electronics
- DVECS II Control Electronics
- DVECS II GUI
- Pilot/Co-pilot display PCs
- TFT flat screen video wall for cameras and control display touch screens
- Customised main control desks available with joysticks and slide switches
- High and Low Voltage Power Distribution Units

SUBSEA

- DVECS II ultra-compact main control pod
- DVECS II 6 or 12- channel lighting control unit
- Interface to Curvetech® Thruster control and hydraulic control units

MULTI-FUNCTION VALVE PACK CONTROLLER CARD

The SMD Curvetech® Multi-Function Valve Pack (MVP) controller card is a powerful and reliable control card designed for valve control use as part of a subsea control system. The MVP card can be used as a standalone valve controller or integrated as part of a valve pack control unit. Available in two configurations - lower resolution 0-100 step or a higher 0-255 step resolution - each version is capable of controlling up to 15 valve outputs and is designed for mounting in oil-filled compensated enclosures pressure rated up to 4000msw.

Remote control is possible via multidrop RS485 - the MVP is configured to act as a slave controller from a host control system. Up to 16 MVP cards can be addressed over an RS485 network.

The unit can be supplied with communications protocol documentation and National Instruments LabVIEW™ based demonstration software for ease of development and integration to third party control systems.

PHYSICAL IO CONFIGURATION

- 15 x 24V A/B Proportional valve controls
- 10 x Analogue Inputs (4-20mA or 0-10V)
- 1 x PT100 sensor external input
- 1 x Moisture sensor external input
- 2 x On-board sensors (Voltage and Temperature)

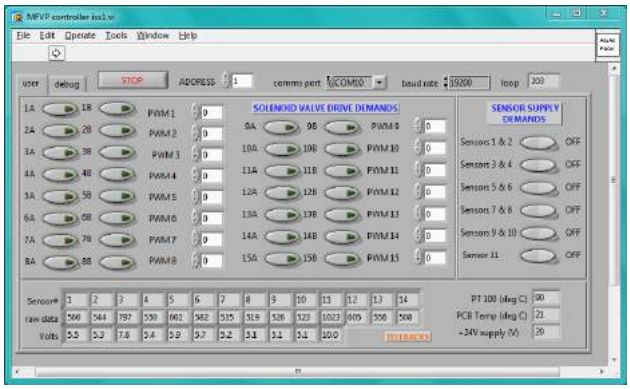

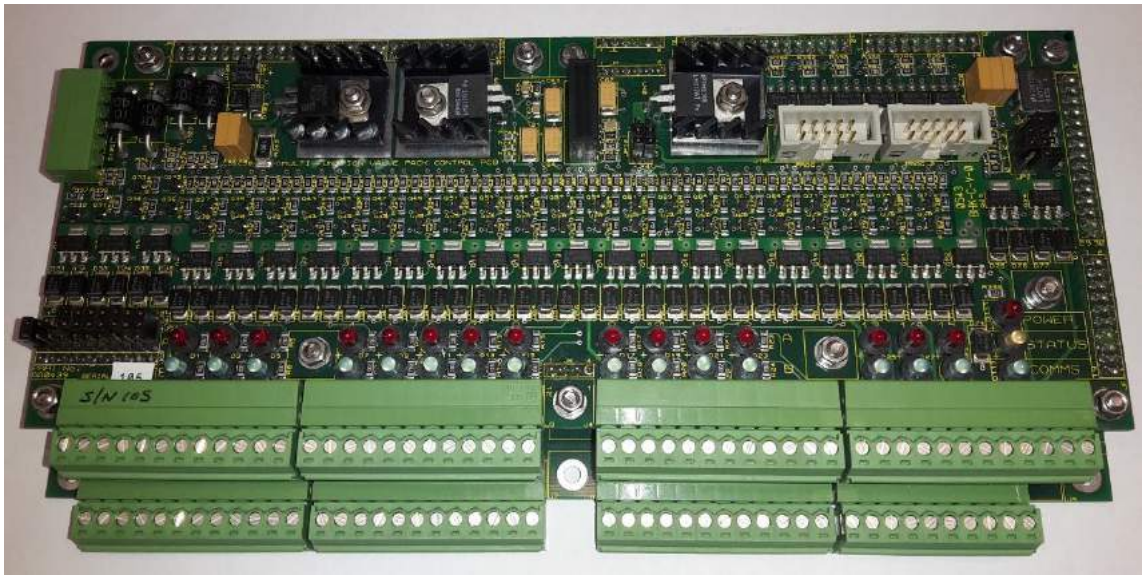

LabVIEW™ is a Trade Mark of National Instruments Corporation

STANDARD MFVP CARD SPECIFICATIONS

Part Number	Depth Rating	No. of Outputs[1]	PWM Resolution	No. Inputs[2]	Std. Comms	Baud Rate
AD7057	3000m	15	0-255	10	RS485	9600 / 19200 / 38400
AA0439	3000m	15	0-100	10	RS485	9600 / 19200 / 38400
AK1266	6000m	15	0-255	10	RS485	9600 / 19200 / 38400
AK0674	6000m	15	0-100	10	RS485	9600 / 19200 / 38400

Notes:

[1]A or B output channels. Up to 1.5Amps per channel limited to power supply total capacity.
[2]Analogue Inputs can be jumper configured as either 0-10V or 4-20mA type.
[3]24Volt DC power supply required.
[4]Specifications are subject to change without prior notice. We accept no liability for any inaccuracy or printing errors.

MOUNTING DETAILS

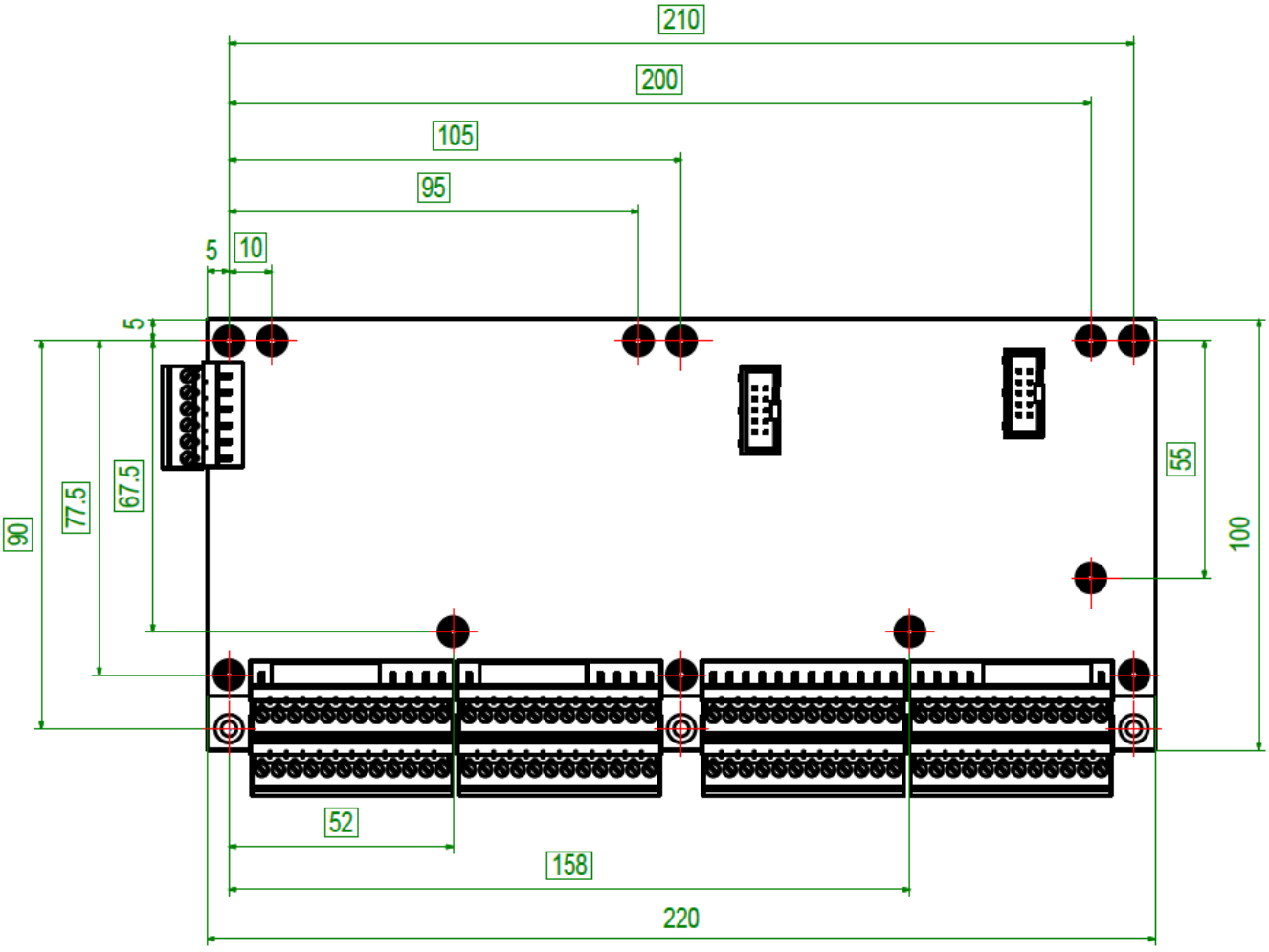

All dimensions in mm

All mounting holes Ø3.5

THRUSTER SERVO CONTROLLER CARD

The SMD Curvetech® Thruster Servo Control (TSC) card is a powerful and reliable control card designed for thruster servo control use as part of a subsea control system. The TSC card can be used as a standalone thruster controller card or integrated as part of a complete Thruster Control Unit (TCU). Available in two configurations - lower resolution 0-100 step or a higher 0-255 step resolution, and 3000msw and 6000msw versions - each version is capable of driving up to 10 servo outputs and is designed for mounting in oil-filled compensated enclosures. Remote control is possible via multidrop RS485 - the TSC card is configured to act as a slave controller from a host control system. Up to 16 TSC cards can be addressed over an RS485 network.

The unit can be supplied with communications protocol documentation and National Instruments LabVIEW™ based demonstration software for ease of development and integration to third party control systems.

PHYSICAL IO CONFIGURATION

- 10 x Current drive servo outputs
- 4 x Analogue Inputs (4-20mA or 0-10V)
- 1 x A / B proportional valve control (software controlled)
- 1 x PT100 sensor external input
- 1 x Moisture sensor external input
- 2 x On-board sensors (Voltage and Temperature)

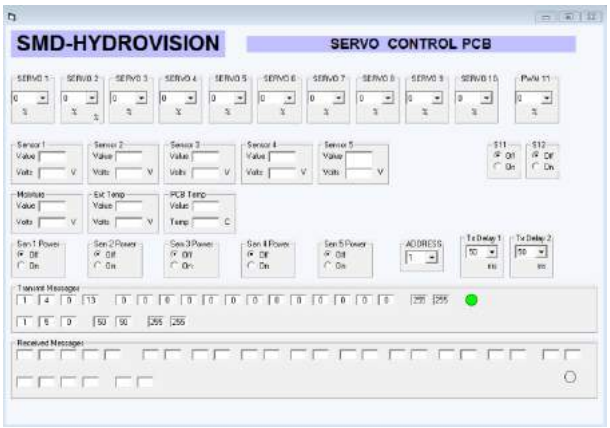

STANDARD TCU CARD SPECIFICATIONS

Part Number	Depth Rating	Servo Outputs[1]	Resolution	Analogue Inputs[2]	Std. Comms	Baud Rate
AA0795	3000m	10	0-255	4	RS485	9600 / 19200 / 38400
AD6358	3000m	10	0-1024	4	RS485	9600 / 19200 / 38400
AK0675	6000m	10	0-1024	4	RS485	9600 / 19200 / 38400

Notes:

[1]Current drive servo output channels.

[2]Analogue Inputs can be jumper configured as either 0-10V or 4-20mA type.

[3]Screw terminal type connectors.

[4]24Volt DC and separate split +/-12VDC power supplies are required. +/-12VDC power supply can be provided via SMD Split Power Supply PCB AB7520

[5]Specifications are subject to change without prior notice. We accept no liability for any inaccuracy or printing errors.

LabVIEW™ is a Trade Mark of National Instruments Corporation

MOUNTING DETAILS

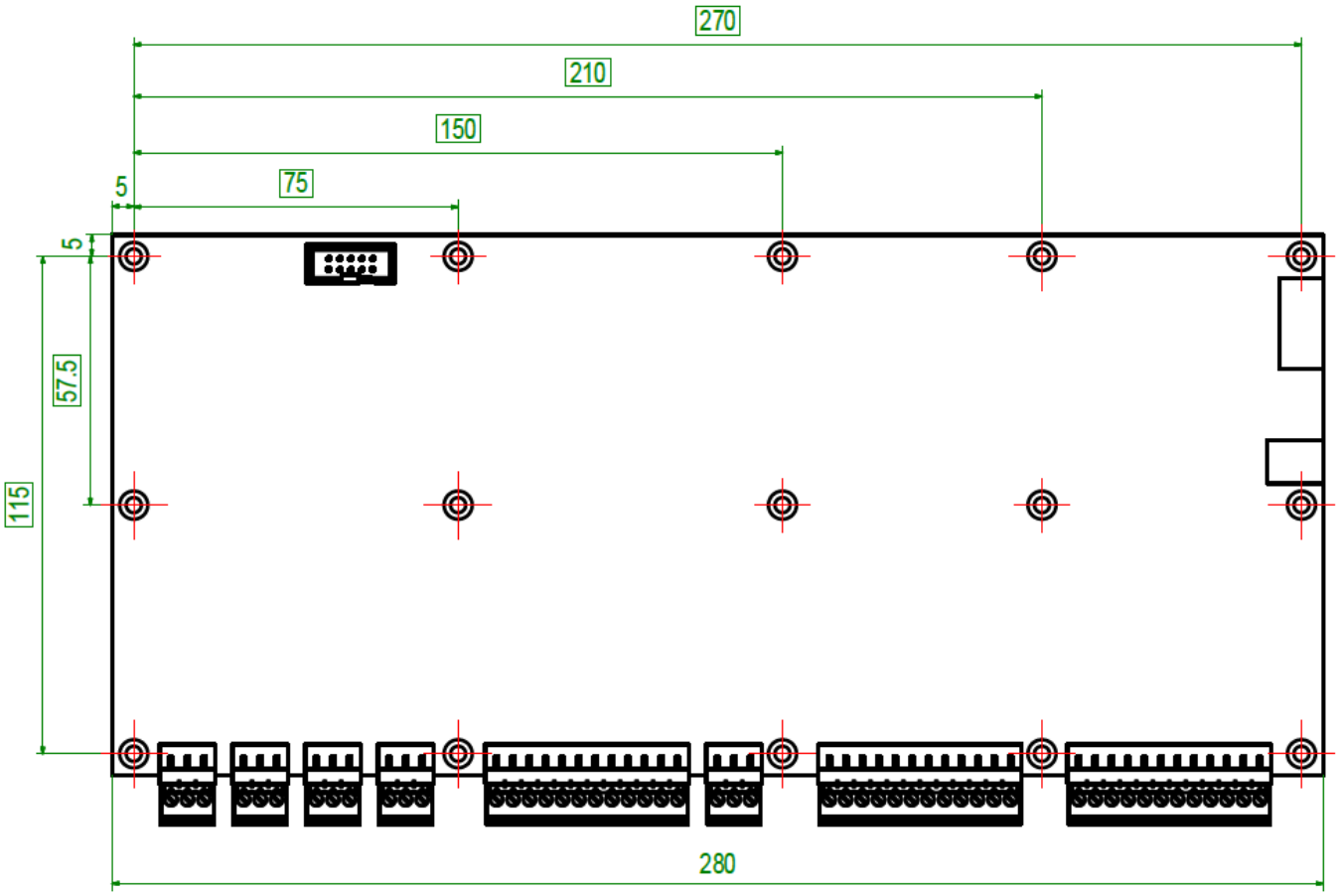

All mounting holes Ø3.5

All dimensions in mm

LIGHT CONTROLLER CARD

The SMD Curvetech® Light Controller (LC) card is a powerful and reliable control card designed for subsea light\lamp brightness control use as part of a subsea lighting control system. The LC card can be used as a standalone light controller or integrated as part of a complete subsea light control unit. Available in two configurations – 6+2-channel and 12+2-channel, and 3000msw or 6000msw depth ratings the LC cards are is designed for mounting in oil-filled compensated enclosures.

Remote control is possible via multidrop RS485 - the LC card is configured to act as a slave controller from a host control system.

The unit can be supplied with communications protocol documentation and National Instruments LabVIEW™ based demonstration software for ease of development and integration to third party control systems.

PHYSICAL IO CONFIGURATION

- 6 or 12-Channel Light Dimmable Output versions available
- Additional 2-channel on\off outputs
- 2 Amps per channel at 110VAC
- 2 x On-board sensors (Moisture and Temperature

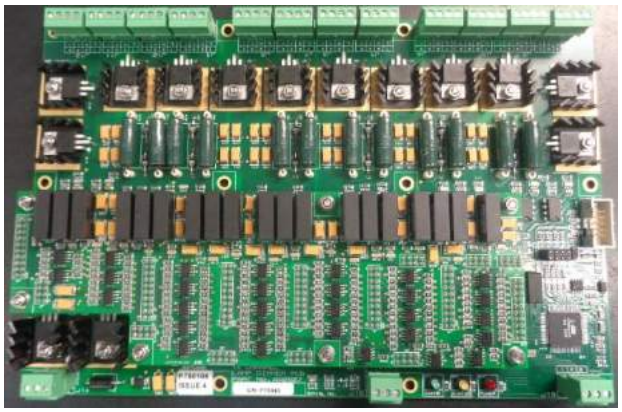

STANDARD LIGHT CONTROL CARD SPECIFICATIONS

Part Number	Depth Rating	Light Control Outputs[1]	Resolution Range	No. Analogue Inputs[2]	Std. Comms	Baud Rate
AA1467	3000m	6+2	0-255	10	RS485	9600 / 19200 / 38400
AA0607	3000m	12+2	0-255	10	RS485	9600 / 19200 / 38400
AK0679	6000m	6+2	0-255	10	RS485	9600 / 19200 / 38400
AK0676	6000m	12+2	0-255	10	RS485	9600 / 19200 / 38400

Notes:

[1]Main 6\12-channels are dimmable controlled. Additional +2 channels are on\off light control only. Each channel is limited up to 2 Amps maximum per channel at nominal 110VAC.

[2]Analogue Inputs for moisture and temperature monitoring.

[3]Screw terminal type connectors.

[4]12Volt DC power supply required.

[5]Specifications are subject to change without prior notice. We accept no liability for any inaccuracy or printing errors.

LabVIEW™ is a Trade Mark of National Instruments Corporation

MOUNTING DETAILS

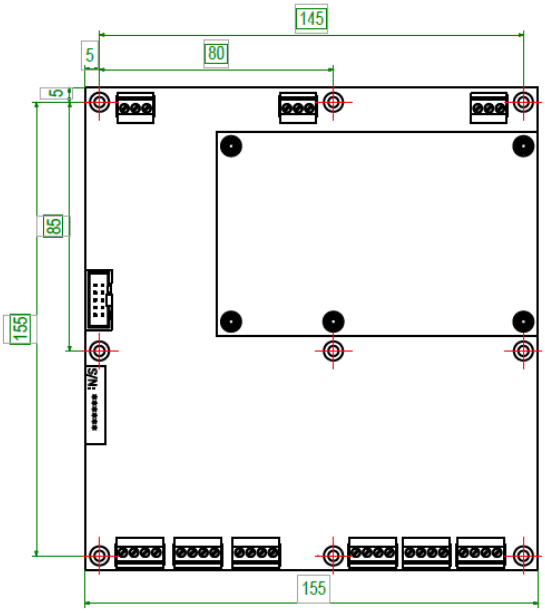

6+2-Channel PCB

All mounting holes Ø3.5

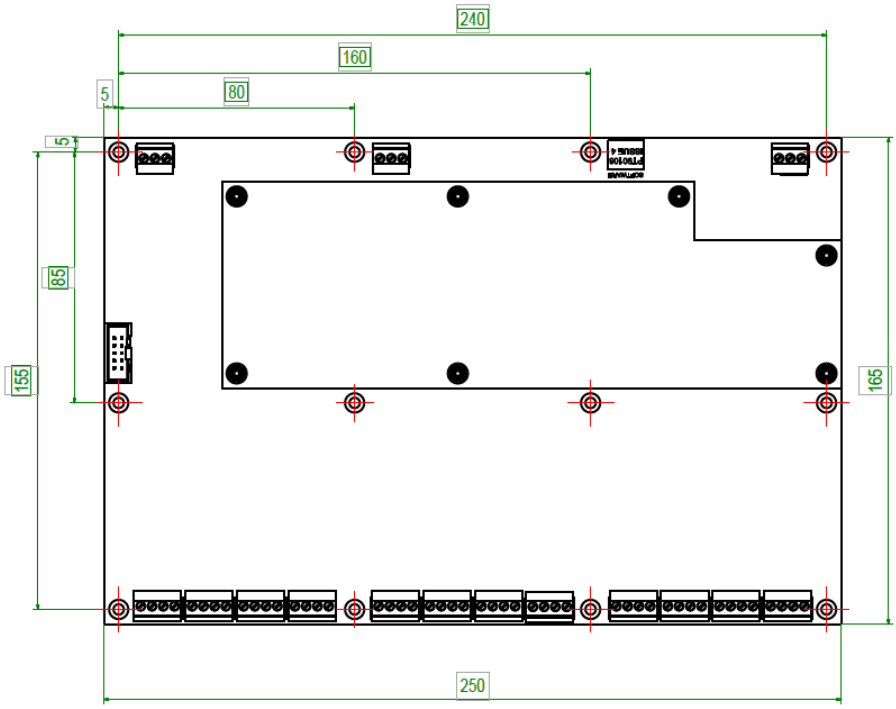

12+2-Channel PCB

Images shown are not to scale - all dimensions in mm

OPTIONAL COMPLETE LIGHT CONTROL UNITS ARE ALSO AVAILABLE

6+2-Channel

12+2-Channel

PT100 CONDITIONING CARD

The SMD Curvetech® PT100 Conditioning card is designed for temperature monitoring applications. The PT100 card can be used for standalone 0°C-100°C temperature sensor monitoring applications or as part of a control system diagnostic and monitoring. The PT100 card is capable of interfacing to 2x PT100 sensors and can handle 2, 3 or 4 wire sensors. Temperature calibration is via software control. Can be directly interfaced with SMD's range of subsea control units as part of an integrated control system.

DETAILS

- Converts PT100 temperature sensor resistance to 0-10V analogue signal.
- 2x PT100 Inputs (2 / 3 / 4-wire)
- 0°C-100°C range
- 24VDC power input with reverse polarity protection

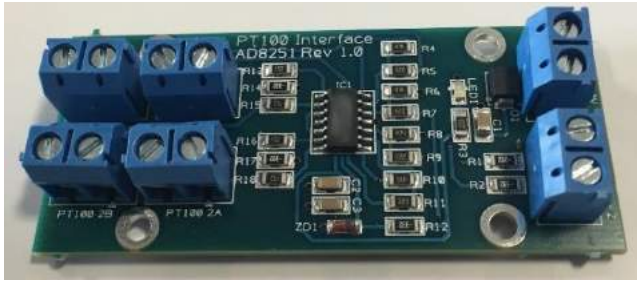

STANDARD PT100 CARD SPECIFICATIONS

Part Number	Depth Rating	No. of Inputs[1]	Input Type	No. of Outputs[2]	Output Type	Connectors
AD8251	3000m	2	PT100	2	Analogue 0-10VDC	Screw Terminal

Notes:

[1]Analogue Inputs can be configured as either 2, 3, or 4-wire type.
[2]A or B temperature output channels. Software calibration required to convert 0-10VDC signal to temperature value.
[3]24Volt DC power supply required.
[4]Specifications are subject to change without prior notice. We accept no liability for any inaccuracy or printing errors.

MOUNTING DETAILS

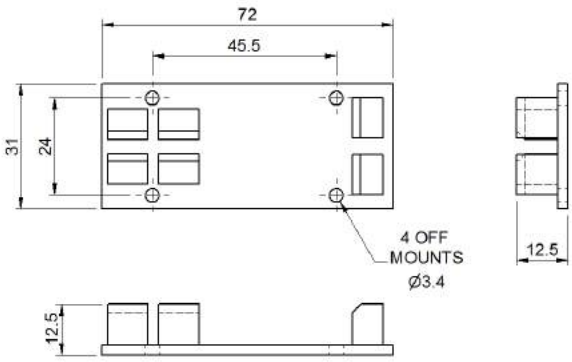

All dimensions in mm

SUBSEA ROTARY ENCODER

The SMD Curvetech® Subsea Rotary Encoder (SRE) is an incremental shaft encoder assembly designed for subsea encoder applications such as for subsea Tether Management Systems (TMS) and winches. The SRE uses a stainless steel marine grade housing and is supplied with mounting bracket for ease of installation. The SRE can also be supplied with a range of subsea connector options.

DETAILS

- 500 pulses per revolution
- 12,000 RPM maximum speed
- 50kHz maximum frequency
- 3000m depth rated as standard, other depth ratings are available on request.

STANDARD SUBSEA ROTARY ENCODER SPECIFICATIONS

Part Number	Resolution[1]	Max. Speed	Max. Frequency	Temperature Range	Mounting Bracket	Power Supply[2]	Connector
AJ9493	500PPR	12,000 RPM	50 kHz	-25°C - +85°C	2x M10 on 116mm pitch	24VDC, <60mA	Impulse

Notes:

[1]A and B quadrature output signals. Output load must be >800Ω. Short circuit protection must be included on the host controller otherwise a short circuit will damage the encoder.
[2]Unit draws no more than 60mA current with 24VDC power supply.
[3]Specifications are subject to change without prior notice. We accept no liability for any inaccuracy or printing errors.

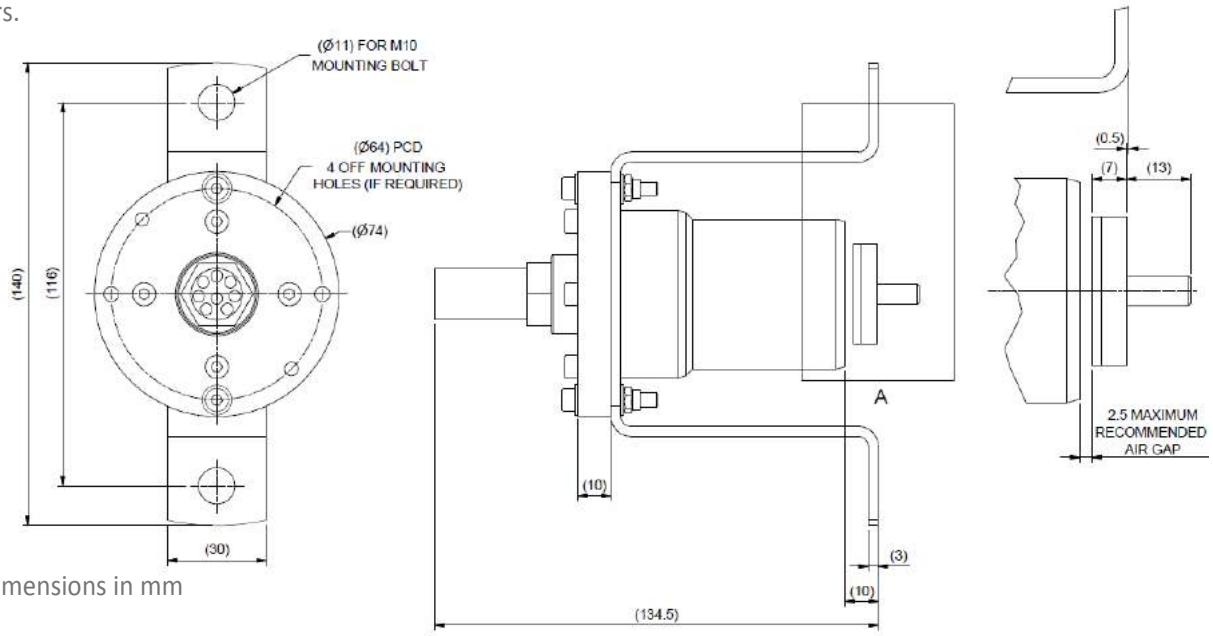

All dimensions in mm

SUBSEA PROXIMITY SENSOR

The SMD Curvetech® Subsea Proximity Sensor (SPS) is an inductive proximity PNP normally open proximity sensor designed for subsea applications. The SPS is housed in a marine grade stainless steel housing can be supplied with a range of subsea connector options and cable lengths.

DETAILS

- PNP Normally open sensor
- 2000Hz maximum frequency
- 500 BAR Pressure Rated
- 3000m depth rated as standard, other depth ratings are available on request.

STANDARD SUBSEA PROXIMITY SENSOR SPECIFICATIONS

Part Number	Sensing distance (in Air)[1]	Type	Switching Frequency	Temperature Range	Mounting	Power Supply	Connector[2]
AF0140	1.5mm	Inductive PNP Normally Open	2 kHz	-25°C - +80°C	M12x1 thread	24VDC, 200mA	Impulse

Notes:

[1]Sensing distance measured in air.
[2]Sensor supplied as standard with 2m length harness, other harness lengths available on request. Pin 1=0V, Pin2=Signal and Pin 3=+10VDC to +30VDC
[3]Specifications are subject to change without prior notice. We accept no liability for any inaccuracy or printing errors.

VACUUM PORT

The SMD Curvetech® Vacuum Port assembly provides the facility to test seal integrity of subsea enclosures prior to launch. Ensuring subsea pressure vessel o-ring seals are correctly seated prior to diving is crucial in maintaining subsea vehicle up-time. The inclusion of a vacuum port on any POD allows field operators to test seal integrity prior to launch of the vehicle preventing costly mistakes and potential damage to internal equipment. The SMD Curvetech® vacuum port is designed for single man operation allowing a vacuum to be easily formed inside the pressure vessel and maintained on closure of the valve.

Optional kits can be supplied to allow a vacuum to be pulled using a standard air supply or alternatively from a 110V electric supply.

DETAILS

- Compact design package
- 3000m rated
- All stainless steel robust design
- Simple vacuum closure for deck operations
- Optional pneumatic (or electric) vacuum pulling kits available

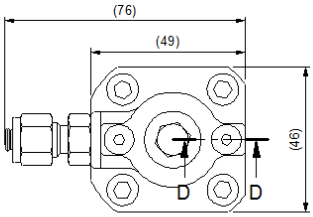

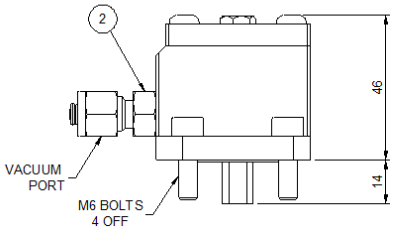

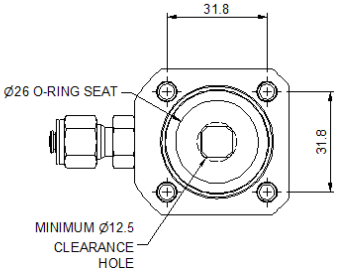

All dimensions in mm

ACCESSORIES

Part Number	Description
AH7433	Pneumatic Vacuum Kit
TBC	Electric Vacuum Kit (110V)

Pneumatic Vacuum Kit

SUBSEA POWER SUPPLY UNIT

The SMD Curvetech® Subsea Power Supply Unit (SPSU) provides 15VDC and 24VDC power supply outputs from an input 110VAC supply. Typically used as part of a subsea instrumentation or control system the SPSU provides additional power supplies for use with 3rd party equipment. Utilising state-of-the-art power supply modules the standard configuration unit includes 1x 15VDC and 1x 24VDC power supplies (e.g. for use with responders/transponders, sensors and other instrumentation) but voltage ranges between 1.5VDC to 58VDC up to 1200W are possible – contact SMD for special requirements. The SPSU includes 2x output ports for ease of wiring and each output connector includes a signal connection and return line for use with 3rd party equipment signals (e.g. for use with Kongsberg or Sonardyne responders/transponders). Housed in a 4000m rated pressure vessel the unit includes an SMD vacuum port and Burton connectors as standard. Other connector types are available on request.

DETAILS

- Compact robust design package
- 4000m rated
- Aluminium housing
- Simple vacuum closure for deck operations
- 110VAC Input Supply
- Standard Outputs 15VDC @30 Amps & 24VDC @10 Amps – other voltages are available on request
- 2x Output Port Connections

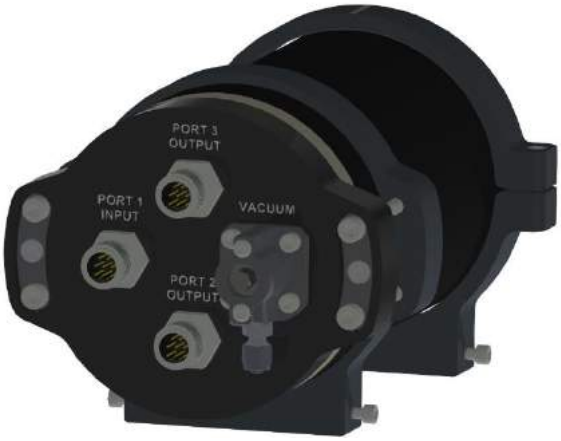

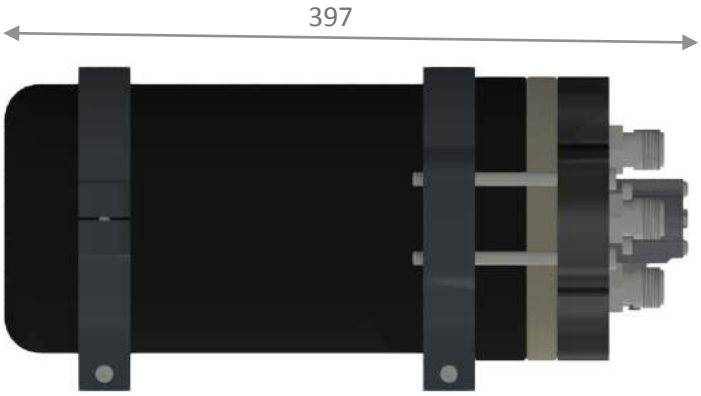

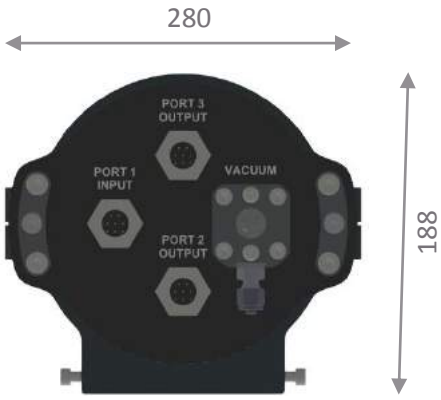

All dimensions in mm

ACCESSORIES

Part Number	Description
AH7433	Pneumatic Vacuum Kit
TBC	Electric Vacuum Kit (110V)

Pneumatic Vacuum Kit

ROV DECK PACK

SMD bring years of knowledge and experience to the design and manufacture of Work Class ROV systems to offer a range of standalone maintenance Deck Pack hydraulic power units specifically designed for use offshore with Work Class ROV systems and other hydraulic power applications. Standard SMD ROV Deck Pack HPU's are manufactured to interface with SMD Work Class ROV's systems to provide support for maintenance and associated hydraulic tooling requirements. All SMD Deck Pack HPU's are designed for long service life and are available with DNV or Lloyds Design Approval.

DECK PACK FEATURES

- 15kW model available as standard, other models available on request
- Safe Area or optional Zone II
- Light weight offshore certified lifting frame design
- 200L Tank Capacity
- Relief Valve
- Pressure gauges
- Bunded (drip tray)
- Marine grade coating
- Optional oil / water separator
- Optional sea water cooling

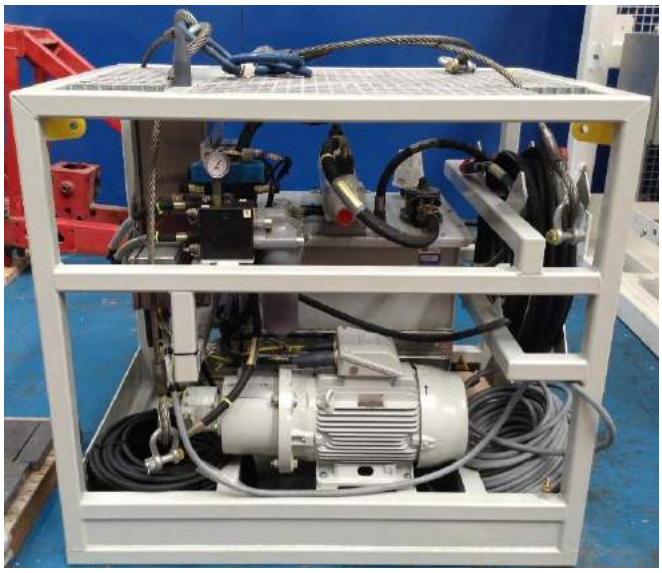

ROV DECK PACK

GENERAL	
Certification[1]	
Design	DNV & Lloyds
Environment	Safe Area or Zone II
Weight	
Standard (exc. oil)	1030kg
Operating Temperature	
Standard	-10°C to +45°C
Deck Mounting	
No. Mount Points	4 (2 optional orientations)
Mount Configuration	Bolted plate, welded to deck
Dimensions[2]	
Length	1515mm
Width	1115mm
Height	1360mm
Padeyes	
Main Lift	4-point to DNV 2.7-3 with sling set

PERFORMANCE	
Power[3]	
Total Power Output	Standard 15kW
Motors	440-480VAC or 690VAC 50Hz or 60Hz, 3-Phase
Instrumentation	
Emergency Stop/Reset Controls	✓
Motor Start/Stop	✓
High Oil Temperature Indicator and shutdown	✓
Motor Running Indicator	✓
System Pressure Gauge	✓
Motor Running Indicator	✓
Oil Level sight Gauge	✓
Hours Run Meter	✓
Hydraulic	
Max Output Pressure	210 bar (3045 PSI)
Max Output Flow	29LPM (50Hz) 35LPM (60Hz)
Reservoir Capacity	200L
Fittings	All Stainless Steal
Connection	Quick release couplings
Pressure Filter	6 micron
Return Filter	6 micron
Seawater Cooling	Optional
Oil / Water Separator	Optional

Notes:

[1]Please specify certification requirements with order. IEC Ex compliant models are also available on request.

[2]Dimensions exclude deck mounting brackets. Standard dimensions shown, actual dimensions dependent on final options selected.

[3]Higher power models are available on request.

AX-VX GASKET REMOVAL TOOLS

SMD offer a range of Curvetech® AX-VX Gasket (Ring) removal tools designed for gasket insertion and removal. Two models are available to suit industry standard gasket sizes. Subject to volume custom designs can be provided on request to suit client specific requirements.

FEATURES

- Rugged construction
- Reliable handling and operation
- Fail-safe mechanism
- Compliant mount arrangement

STANDARD PART SPECIFICATIONS

Part Number[1]	Range mm (inches)		Operating / Maximum Working Pressure		Weight Kg (lbs)		Overall Dimensions (L x W x H) mm (inches)
	Min	Max	Bar	PSI	In Air	In Water	
AF7842	476.25 (18 ¾")	539.75 (21 ¼")	200 / 250	2900 / 3625	12 (26.5)	7 (15.4)	570 x 220 x 315 (22.4" x 8.66" x 12.4")
AF7843	346.08 (13 5/8")	425.45 (16 ¾")	200 / 250	2900 / 3625	14 (30.9)	8 (17.7)	480 x 310 x 320 (18.9" x 12.2" x 12.6")

Notes:

[1]Standard models shown – customised versions can be provided on request. Please contact SMD Sales to discuss your specific requirements.

DV_7000

DV_7001

WROV 28kW DIRTY WORK PACK

The Curvetech® 28kW Dirty Work Pack (DWP) is an Isolated Hydraulic Power Unit (IHPU) that can be used to reduce the risk of oil contamination within the main ROV hydraulic system. The DWP unit provides an isolated hydraulic supply for use with hydraulic tools and equipment where contaminants such as dirt or water may be a problem. The unit allows the use of ROV tooling such as grinders, hot stabs, cutters and skids to be operated on a secondary (dirty) hydraulic circuit, where if contamination arises it becomes a much simpler process to clean the hydraulic system. Additionally dedicated high and low pressure filters are included in the DWP unit to remove trace contaminants before they impact on performance. Alternative sizes and power ratings of DWP's are also available upon request.

FEATURES

- Compact, low weight
- Quick connect hydraulic fittings
- Service friendly
- Pressure compensated flow control
- High efficiency conversion

HYDRAULIC SPECIFICATIONS

Part Number	Max Output Pressure	Maximum Input Flow		Maximum Output Flow		Operating Temperature Range	Conversion Efficiency	Pump	Hydraulic Motor
	Bar	LPM	GPM	LPM	GPM				
AJ4889	210	88	19.35	81	17.8	-10°C to +45°C	84%	Rexroth A17FO-32CC	Rexroth A17FO-32CC

MECHANICAL SPECIFICATIONS

Part Number	Dimensions						Weight				Mounting Arrangement
	Length		Width		Height		In Air		In Water		
	mm	in	mm	in	mm	in	kg	Lbs	kg	Lbs	
AJ4889	700	27.56	181	7.13	450	17.72	46	101.4	35	77.2	12x M10 threaded holes

ACCESSORIES

Description	Notes
iHCU Valve Pack	Please refer to Hydraulic valve pack datasheet for further details
Reservoirs / Compensators	Please refer to SMD compensators datasheet for further details
Mounting Brackets	Please contact SMD to discuss your specific requirements
Motor / Pump Seal Kit	SMD Part No. AC8176
High Pressure Filter Element	SMD Part No. AJ4984
Return Filter Element	SMD Part No. AJ4991

WROV JETTING SKID

The SMD Curvetech® WROV Jetting Skid is a highly cost effective solution for trenching applications. Designed to provide additional jetting capability to Work Class ROVs the unit is compatible with SMD's range of WROVs but can also be offered for use with other manufacturers ROVs.

STANDARD UNIT FEATURES

- Water Jetting System
- Skids
- 1.5m Jetting Depth
- 1m Twin Jet Legs
- 75kW Water Pump
- Manual variable width adjust
- Custom designs can be supplied
- Integral Motor compensator and Circuit Reservoir
- Hydraulic retract and deploy
- 6-Station Hydraulic Control Unit
- Neutrally buoyant
- High strength construction

GENERAL SPECIFICATIONS

Part Number	Depth Rating[1]	Maximum Jetting Depth[2]	Weight in Air	Weight in Sea	Trenching Cable Diameter
AD5422	1000m	1500mm	2000kg	Neutral	100 – 135mm

ELECTRICAL SPECIFICATIONS

Part Number	Power		Poles	Frequency Hz	Speed RPM	Voltage[3]	Connector
	SHP	kW					
AD5422	83 - 100	61 - 73	2	50 / 60	2500 / 3400	2500 / 3000	Burton 55-Series

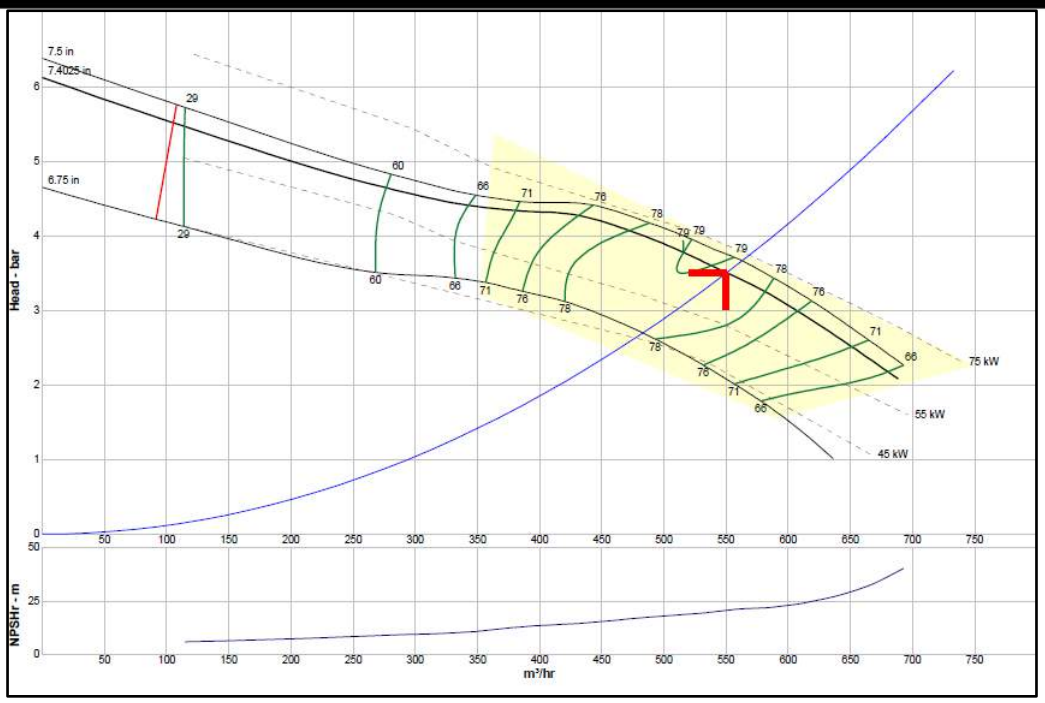

WATER PUMP SPECIFICATIONS

Part Number	Type	cc	Optimal Pressure (Bar)	Max Flow (m^3/hr)	Notes
AD5422	KFA Series 6[4]	45	3.5	520	See graph for further performance data

Notes:

[1]Standard depth rating, alternative depth ratings can be supplied – contact SMD Sales to discuss your requirement.

[2]Jetting depth quoted is in course to medium sand seabed.

[3]Nominal voltage

[4]Bosch Rexroth

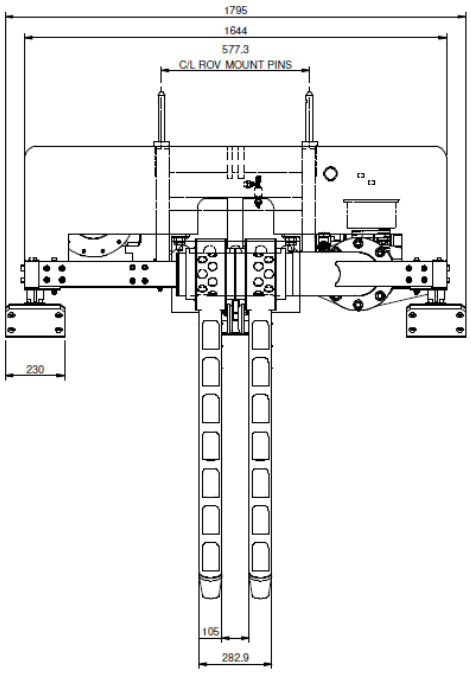

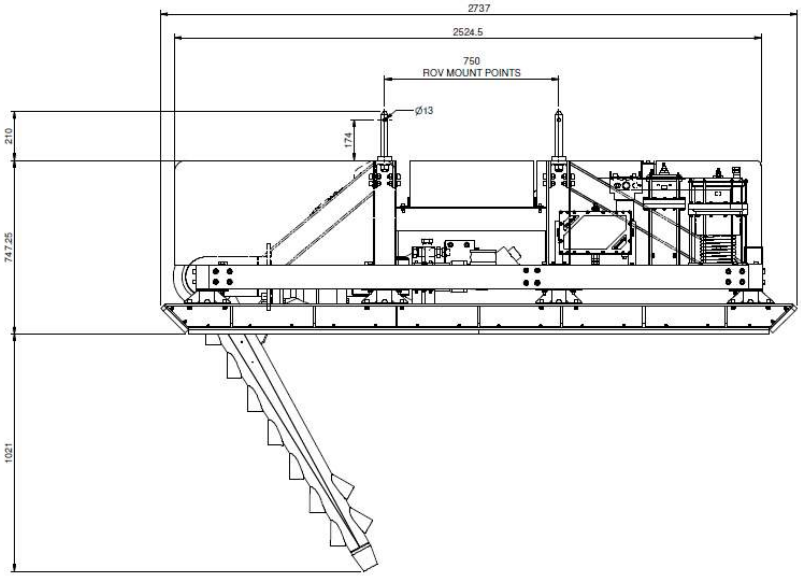

WROV SCIENTIFIC SKID

The SMD Curvetech® WROV Scientific Skid is a highly cost effective solution for adding scientific monitoring and sampling capability to a Work Class ROV. Designed to provide additional scientific sample collection and tooling capability to Work Class ROVs the unit is designed for use with SMD's range of WROVs but can also be provided for use with other WROV manufacturers.

STANDARD UNIT FEATURES

- Water Sampler
- Benthic Suction Sampler
- Push Core Sampling
- Single / Dual Manipulator Option
- Hydraulic Cutter Option
- Grinder Option
- Neutral buoyancy option available
- Custom design can be provided

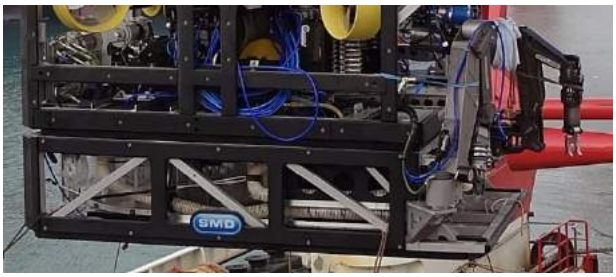

GENERAL SPECIFICATIONS

Part Number	Depth Rating[1]	Benthic Sampler[2]	Weight in Air	Weight in Sea	Sliding Tool Tray	Altimeter	Notes
AH2661	4000m	12	~550kg	~206kg	✓	Optional	Sample storage box included

HYDRAULIC SPECIFICATIONS

Part Number	Sample Pump			Notes
	Type	Max Pressure (PSI)	Max Flow (LPM)	
AH2661	9303P[4]	100	6.8	

Notes:

[1]Standard depth rating, alternative depth ratings can be supplied – contact SMD Sales to discuss your requirement.
[2]12-Sample carousel assembly with suction sampler – please contact SMD if alternative sampling system is required.
[3]Nominal voltage
[4]Hypro centrifugal pump
[5]Can be run from ROV 12-station HCU or optional separate HCU
[6]Contact SMD for detailed electrical interface requirements.

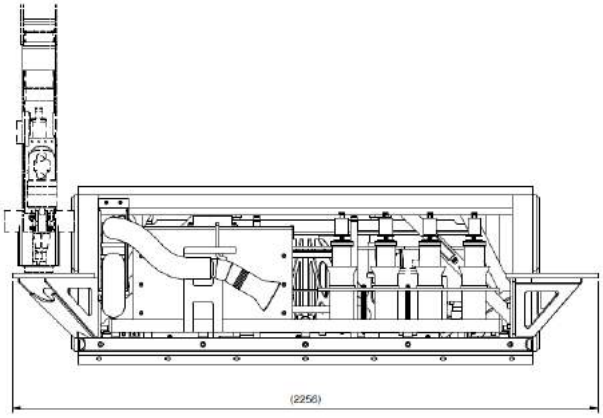

Front View

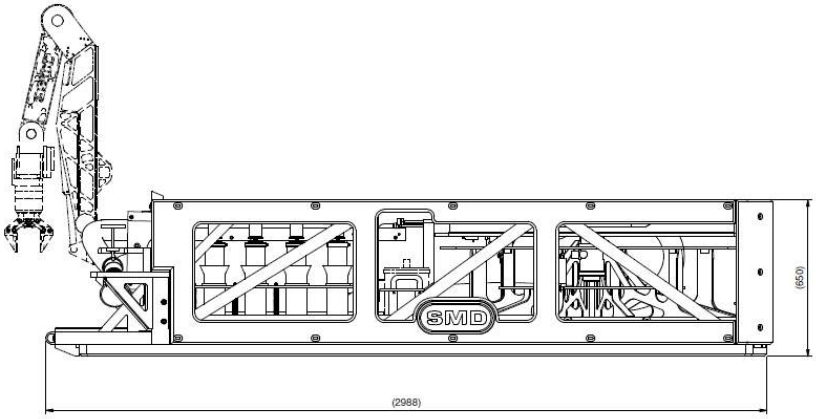

Side View

WROV PIPELINE SURVEY SKID

The SMD Curvetech® WROV Pipeline Survey Skid is a highly cost effective solution for adding pipeline surveying capability to a Work Class ROV. The design incorporates wheels and a TSS440 pipe tracking system to provide an integrated pipe survey system. The unit is designed for use with SMD's range of WROVs but can also be provided for use with other WROV manufacturers.

STANDARD UNIT FEATURES

- Wheeled survey skid
- Integrated TSS440 Pipe Survey System
- Camera boom arms with Pan and Tilts
- Cylinder operated deployment frame
- Neutral buoyant
- Rugged chassis design
- Low friction wheels
- Custom design can be provided

GENERAL SPECIFICATION

Part Number	Depth Rating	Pipe Survey System	Weight in Air	Weight in Sea	Contact Probe
AA0001	2000m[1]	TSS440[2]	~350kg	Neutral	Optional

Notes:

[1]Standard depth rating, alternative depth ratings can be supplied.
[2]Standard Teledyne TSS440 system.

Please contact SMD Sales to discuss your specific requirements.

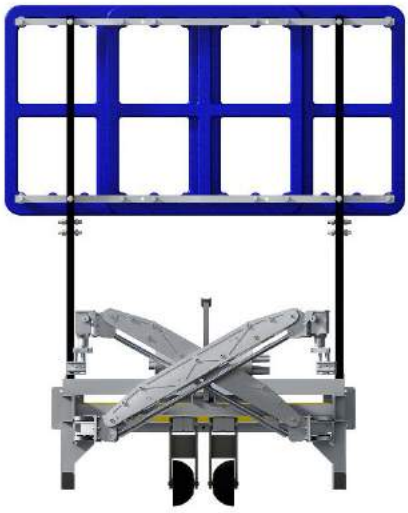

CURVETECH

WORLDWIDE SALES OFFICES

HEAD OFFICE & HEAVY PRODUCTION

SOIL MACHINE DYNAMICS LTD
TURBINIA WORKS, DAVY BANK, WALLSEND,
TYNE AND WEAR,
NE28 6UZ, UK

T +44 191 234 2222 E info@smd.co.uk

www.smd.co.uk

SMD ROV SYSTEMS

SOIL MACHINE DYNAMICS LTD
UNIT L3, INTERSECT 19, TYNE TUNNEL TRADING ESTATE, NORTH SHIELDS, TYNE AND WEAR,
NE29 7UT, UK

T +44 191 234 2222 E info@smd.co.uk

www.smd.co.uk

HOUSTON OFFICE

SOIL MACHINE DYNAMICS USA LLC
21811 KATY FREEWAY, SUITE D111, KATY,
TEXAS 77450, USA

T +1 713 338 3700 E info@smd-us.com

www.smd-us.com

SINGAPORE OFFICE

SOIL MACHINE DYNAMICS SINGAPORE PTE TLD
33 UBI AVE 3, VERTEX #01-59,
SINGAPORE 408868

T +65 6576 9160 E info@smd.sg

www.smd.sg

BRAZIL SUPPORT OFFICE

E brazil@smd-us.com

Copyright © Soil Machine Dynamics Limited 2017. All rights reserved. No part of this publication may be reproduced or transmitted, in any form or by any means including photocopying, without the prior written permission of Soil Machine Dynamics Limited, the copyright owner. If any unauthorised acts are carried out in relation to this copyright work, a civil claim for damages may be made and/or a criminal prosecution may result.