PRE-LAY PLOUGH

THE NEXT GENERATION OF CABLE INSTALLATION

Boulder

Trenching

Backfill

Low Risk Power Cable Installation & Trenching System

There are many complex geotechnical challenges when planning a power cable route. Changing soil conditions and glacial boulders can add time and potential product damage risk to the installation and trenching process. There are occasions when one trenching tool will not suit the whole route and this compromise in tool selection will mean the contractor is unlikely to achieve the desired depth of lowering targeted for the protection of the cable.

By using proven ploughing techniques, used extensively in pipeline installation in the North Sea and other locations, the risk of not achieving depth of lowering is almost entirely removed. SMD has considered the specific application of power cable installation and has developed a multifunctional pre-lay plough system which is configurable on the back deck of a commonly available 250Te anchor handling tug.

The combination of novel multiple configurations, alongside the well proven heavy duty plough functionality provides a unique groundbreaking vehicle that sets the standard for pre-lay ploughing.

Key Attributes

- 3 modes in one tool
    - o Boulder removal & pre-lay grapnel; currently 10m wide route
    - o Stable trench plough; up to 1.7m with multi-pass capability for hard ground
    - o Backfill returns trench soil to cover product; excludes initial boulder spoil heaps
- Utilises non-specialist anchor handling tugs
- Enables faster low risk lay process with jetting in sedimentation only
- Trenching can be done in advance off the critical path
- Depth of lowering known in advance of cable installation
- Suitable for all power cable sizes and applications
- Steering and depth control for precise, controllable trench creation and route following
- Deep trenching with vertically sided trench base for maximum product protection
- Safe reliable launch and landing using a detachable lift point
- Lower cost – capital investment for one tool, single mobilisation per campaign

Burial Process - Prepare the Route

Pre-lay grapnel and boulder removal mode

There is a requirement prior to any cable lay or trenching operations to remove hazards from the cable lay route. A pre-lay grapnel run is done, with hooks normally, to remove any potential snags such as old cables, wires and fishing nets from the route. Where there are glacial boulders, these also need to be moved where possible and avoided if not.

The boulder clearing and grapnel run configuration includes a demountable front plough blade which protects the front skids, together with mould board extensions which eject the boulders outside the spoil heap zone. The front plough blade and the mould board extensions are hydraulically actuated to allow deployment with a client supplied A-Frame.

The example below shows a 10m wide clearance of boulders and debris, the configuration is for up to 1.2m diameter boulders and width or clearance can be adjusted to suit the client's project.

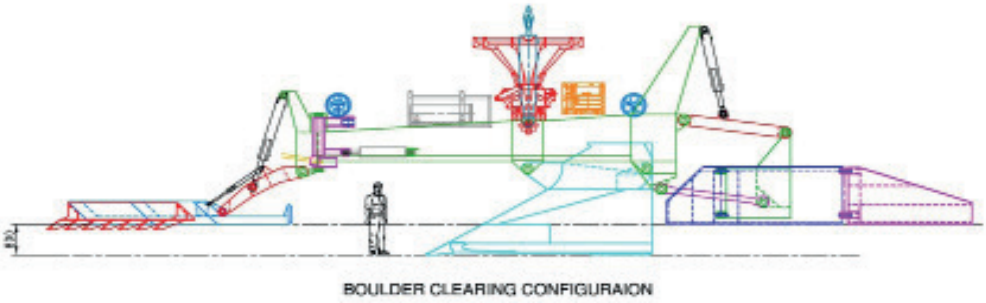

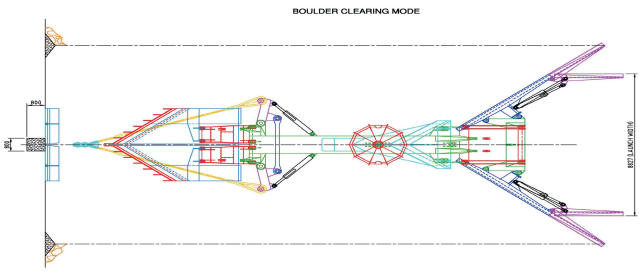

Figure 2. Boulder clearing configuration - top view

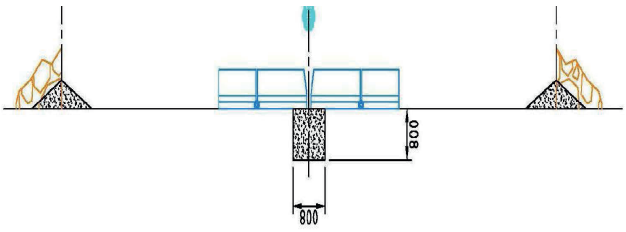

Figure 3. First pass boulder clearing trench and pile profiles

Burial Process - Create a Stable Trench for Cable Laying

Second pass trenching mode

By creating a 'Y'shaped trench, it is possible to return to the trench at a later date to conduct the cable installation and jet trenching as a separate operation. The quality of this trench is critical to avoid the trench collapsing. SMD have years of experience from pipeline trenching activities for the creating of this trench. The plough is also fully instrumented so it can record the depth and scan the trench profile as it is created, saving on additional survey requirements after the operation. SMD's ploughs are fully steerable allowing the plough to follow the optimum cable lay route proposed.

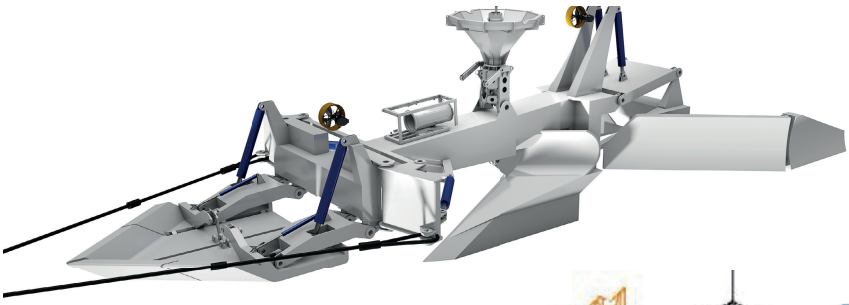

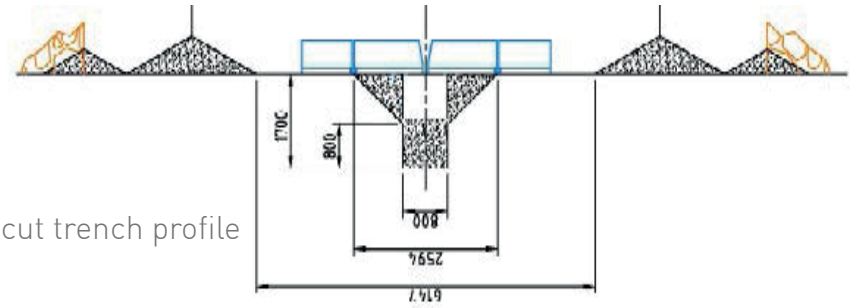

Figure 4. Final pre-cut trench profile

Dual thrusters position the plough for multi-pass landing, by controlling orientation and lateral position during the launch and landing operation. The plough is lowered in to the 800mm slot created during the first pass which assists in stabilising the plough and following the same route.

The plough share comprises of a 'V' shaped upper share and a vertical lower section creating a'Y' shaped trench. The share is aggressively tapered at the forward leading edge, presenting a sharp profile to the soil which penetrates and lifts the soil out of the trench.

The self-sharpening share point is cast from wear-resistant steel; this is fixed and is easily replaceable. The action of the plough share is to displace all of the soil from the trench upwards and to the side of the plough, to create spoil heaps which can be returned to the trench during backfill operations. This leaves a stable trench which allows accurate jetting operations within the trench during the cable lay process.

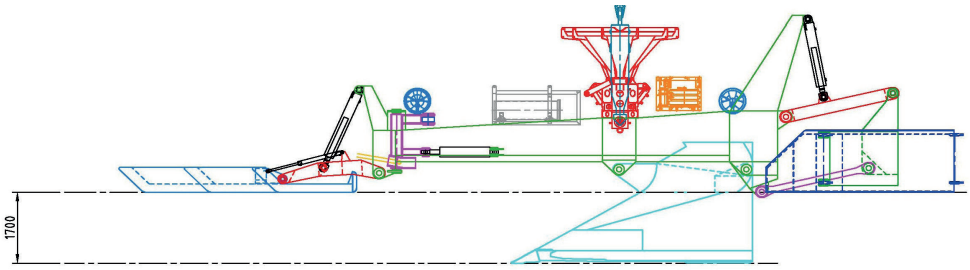

Figure 5. Trenching pass configuration - side view

Burial Process - Cable Lay

Cable lay with jet trenching

As all of the hard work has been done in creating the trench by the plough, it is now possible to simultaneously lay and jet trench the cable at the rate of the lay vessel or jet trencher rather than at the rate of trench cutting machine. This eliminates the risk of either a conventional cable plough or mechanical cutting plough getting stuck during this process and potentially damaging the cable. As the trench has recently been cut to a predetermined depth, the jet trencher is only fluidising transient sands and loose clays and so positive placement of the cable in to the bottom of the trench is almost guaranteed.

Fluidising of sediment and probable trench collapse during the jetting lay process will create a degree of cable burial, ensuring the cable is covered and protected immediately after laying.

SMD has a range of trenchers available for this application and they can safely straddle the pre-cut trench between the spoil piles.

Burial Process - Backfill Mode

With the reconfiguration of the extended mould boards, the articulation of the front skids and the addition of mould board chains, the plough can be used for post-lay backfill operations.

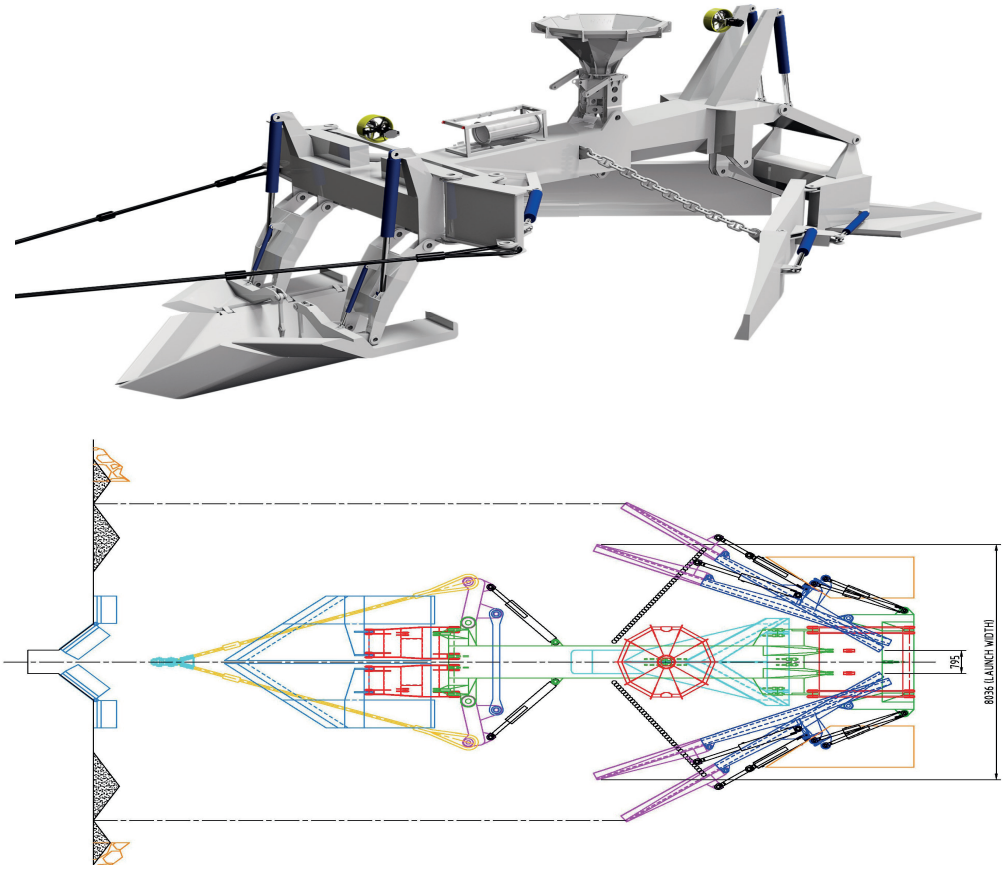

Figure 6. Backfill pass configuration - side view

Performance

The below tables are derived from SMD/Reece Models and verified by third parties and show the expected performance in both homogeneous clay and sand soils.

The expected performance shows that in grounds up to 150kPa the required 1.7m trench depth can be achieved with 240Te tow force in clays and 200Te tow force in impermeable sands.

Tow Force (Te)	Clay Type	Clay Shear Strength kPa	Trench Depth Pass #1 (m)	Progress Rate Pass #1 (m/ hr)	Trench Depth Pass #2 (m)	Progress Rate Pass #2 (m/ hr)
80	Soft	50	1.7	500	-	-
120	Firm	100	1.7	500	-	-
240	Stiff	150	1.7	400	-	-
250	Very Stiff to Hard	250	1.4	300	-	-
140-200	Very Stiff to Hard	350	0.8	400	1.4	400
160-210	Very Stiff to Hard	400	0.8	400	1.4	300
200-250	Very Stiff to Hard	600	0.8	350	1.4	250

HOMOGENEOUS CLAY SOILS
(Figures are Indicative)

Tow Force (Te)	Sand	Trench Depth (m)	Progress Rate (m/ hr)
130	Course	1.7	500
200	Fine/ Dense	1.7	400
250	Very Dense	1.7	300
250	Impermeable	1.7	150

SANDS
(Figures are Indicative)

For sands progress rates can be improved with jetting.

Patent pending
Application No: EP16159131

For more information contact:
Graeme Walker
Business Development and Sales Manager
T: +44 (0) 191 234 8690
M: +44 (0) 7891 260 324