CURVETECH

TECHNICAL MANUAL

THRUSTER HTE_300BA-32MK2

REVISION 0 / OCTOBER 2016

SMD

CONFIDENTIALITY STATEMENT

ⓘ NOTICE:

The information in this document is confidential and is the property of Soil Machine Dynamics Limited. It is to be held strictly in confidence by the recipient. Disclosure of any such information is to be made only to those employees of the recipient who need to use the information and is the responsibility of the recipient to bind any such employees to retain such information in strict confidence.

Copyright in this document is the property of Soil Machine Dynamics Limited. No copy is to be made without the written permission of Soil Machine Dynamics Limited.

Any patent applications, patents and/or registered design applications, registered designs or design rights arising from this document or information contained in it are the absolute property of Soil Machine Dynamics Limited and as such are subject to the obligation of confidence on the recipient set out above.

Soil Machine Dynamics reserve the right to revise, change, modify or otherwise alter any part or parts of the document(s) or information contained herein without prior notice.

CAUTIONS & WARNINGS KEY

⚠ DANGER:

Indicates a hazard with a high level of risk which, if not avoided, could result in death or serious injury.

⚠ WARNING:

Indicates a hazard with a medium level of risk which, if not avoided, could result in death or serious injury.

⚠ CAUTION:

Indicates a hazard with a low level of risk which, if not avoided, could result in minor or moderate injury.

ⓘ NOTICE:

Indicates a potential risk of damage to the supported product, property, SMD confidentiality and copyright.

Confidential, copyright property of Soil Machine Dynamics Limited. All rights reserved.

REVISION CONTROL

REVISION ** APPROVAL

Checked by:

Approved by:

CHANGE LOG

The table below details the changes made to the document revision.

Description	Date	Created by	Checked by	Approved by	Revision
					6
					5
					4
					3
					2
					1
Initial Release	October 2016	MJ	MvZ	MvZ	0
TITLE	Thruster HTE_300BA-32MK2				
ID	8101-1243101				

Confidential, copyright property of Soil Machine Dynamics Limited. All rights reserved.

TABLE OF CONTENTS

Confidentiality Statement ..... Page 2
Cautions & Warnings Key ..... Page 2
Revision Control ..... Page 3
Safety ..... Page 5
Introduction ..... Page 6
Performance Characteristics ..... Page 7
Specification ..... Page 9
Installation ..... Page 11
- Thruster Mounting ..... Page 11
- Motor Hydraulic Connections ..... Page 11
- Supply/Return Line Connections ..... Page 12
- Case Drain Connection ..... Page 12
- Bearing Housing Connection ..... Page 13
- Thruster Seals ..... Page 14

Maintenance Procedures ..... Page 15
- General Maintenance ..... Page 15
- Hydraulic Motor ..... Page 15
- Bearing Housing ..... Page 15
  - Bearing Housing Shaft Seal Replacement ..... Page 16
  - Bearing Housing Seals and Seal Ring Replacement ..... Page 17
  - Seal Replacement ..... Page 17
  - Shaft Wear Ring Replacement ..... Page 18
  - Reassembly ..... Page 19
  - Replace Thruster Bearings ..... Page 19
- Storage ..... Page 19

Accessories ..... Page 20
Service and Spare Parts ..... Page 21
- Service Returns Procedure ..... Page 21
- Spare Parts ..... Page 21
- Distributors ..... Page 21

Drawings ..... Page 22

Confidential, copyright property of Soil Machine Dynamics Limited. All rights reserved.

SAFETY

SMD Statement on Product Safety and COSHH material safety data sheets can be found on the Safety & COSHH CD (SMD Part No. AC8901).

Confidential, copyright property of Soil Machine Dynamics Limited. All rights reserved.

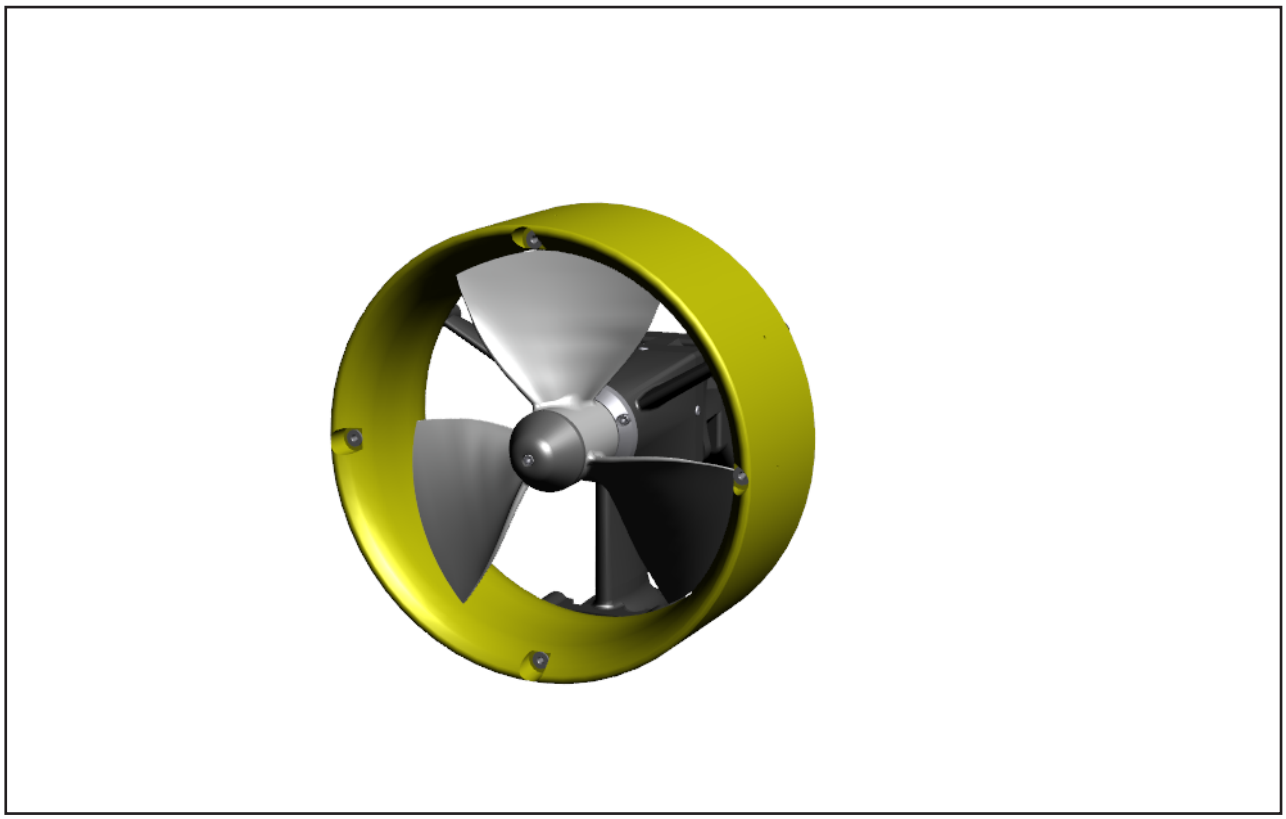

Figure 1 - Thruster HTE_300BA-32MK2

(3D Model. Click to Activate)

INTRODUCTION

This document describes the installation operation and maintenance of the HTE 300 Curvetech Thruster. Curvetech thrusters have been designed to propel the new generation of high-powered ROV's, ploughs and similar underwater platforms. Other thrusters in the SMD Curvetech range are the HT 230, HTE 300, HTE 380, HTE 430, HTE 500 & HT 750. Please contact SMD for further information on these products.

The HTE 300 is fitted with a 310mm, diameter high pitch propeller and a fixed displacement motor with a displacement of 32 cc/rev.

The low revving, high torque thruster design provides exceptionally high efficiency and approximately equal forward and reverse thrust. The thruster is fitted with an integral mounting pedestal, which can be readily interfaced to the customer's equipment.

The Curvetech HTE300 thruster is one of a new range that has been developed specifically to match the propeller characteristic to the motor torque characteristic to provide optimum performance at the maximum operating pressure (approx 210bar, 3000psi) typical of the majority of ROV hydraulic systems. Achieving 25% more thrust than the previous HT300 model at the same pressure.

The propeller and nozzle have been re-designed to increase the propeller diameter and improve the thrust performance without increasing the overall size of the thruster.

The bearing housing has been integrated into the mounting pedestal casting to achieve closer manufacturing tolerances to be maintained, particularly on propeller tip clearance which contributes to thrust efficiency.

Confidential, copyright property of Soil Machine Dynamics Limited. All rights reserved.

The mounting pedestal maintains the same bolting pattern as the original allowing for direct replacement on existing systems. In standard form the main hydraulic connections are on the back of the standard, light weight aluminium motor to ensure minimum restriction to the water flow through the thruster. Adapter blocks are available to convert the port position to match existing system pipe work.

⚠ WARNING:

Only operate the thruster momentarily on deck as the thruster maximum rpm will be exceeded when operated off load (in air).

PERFORMANCE CHARACTERISTICS

The hydraulic system pressure and available flow determines the thrust produced by the HTE 300 thruster. To assist the customer in identifying the thrust performance when fitted to his system, the following performance characteristics are provided Figure 2 - Thruster Performance (Pressure & Flow vs. Thrust) & Figure 3 - Thruster Performance (Power vs. Thrust).

To identify thrust, calculate the pressure available at the thruster motor considering all pressure drops in the system. From the appropriate graph, read off thrust at the calculated motor pressure and read off flow at this thrust. This gives the pressure, thrust and flow operating point of the thruster. As forward and reverse thrust is approximately equal, this operating point is valid for both directions of operation.

The performance data provided is for a single thruster operating in open water at a depth, which eliminates the effect of cavitation. Restriction of the water flow through the thruster due to the platform frame, buoyancy or other assemblies will reduce the thrust from the open water thrust data. Allowance should be made for this de-rating when designing the system.

Confidential, copyright property of Soil Machine Dynamics Limited. All rights reserved.

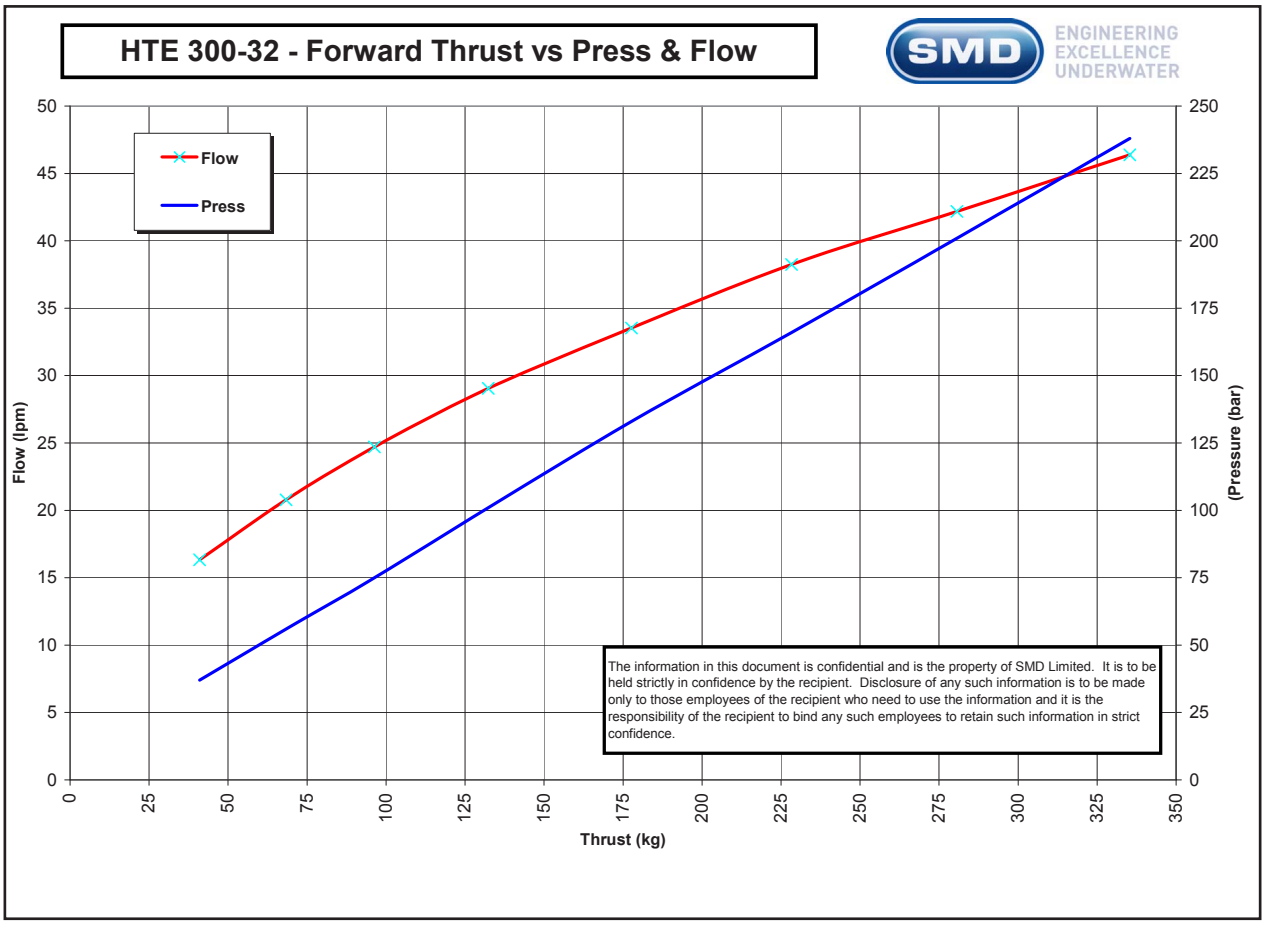

Figure 2 - Thruster Performance (Pressure & Flow vs. Thrust)

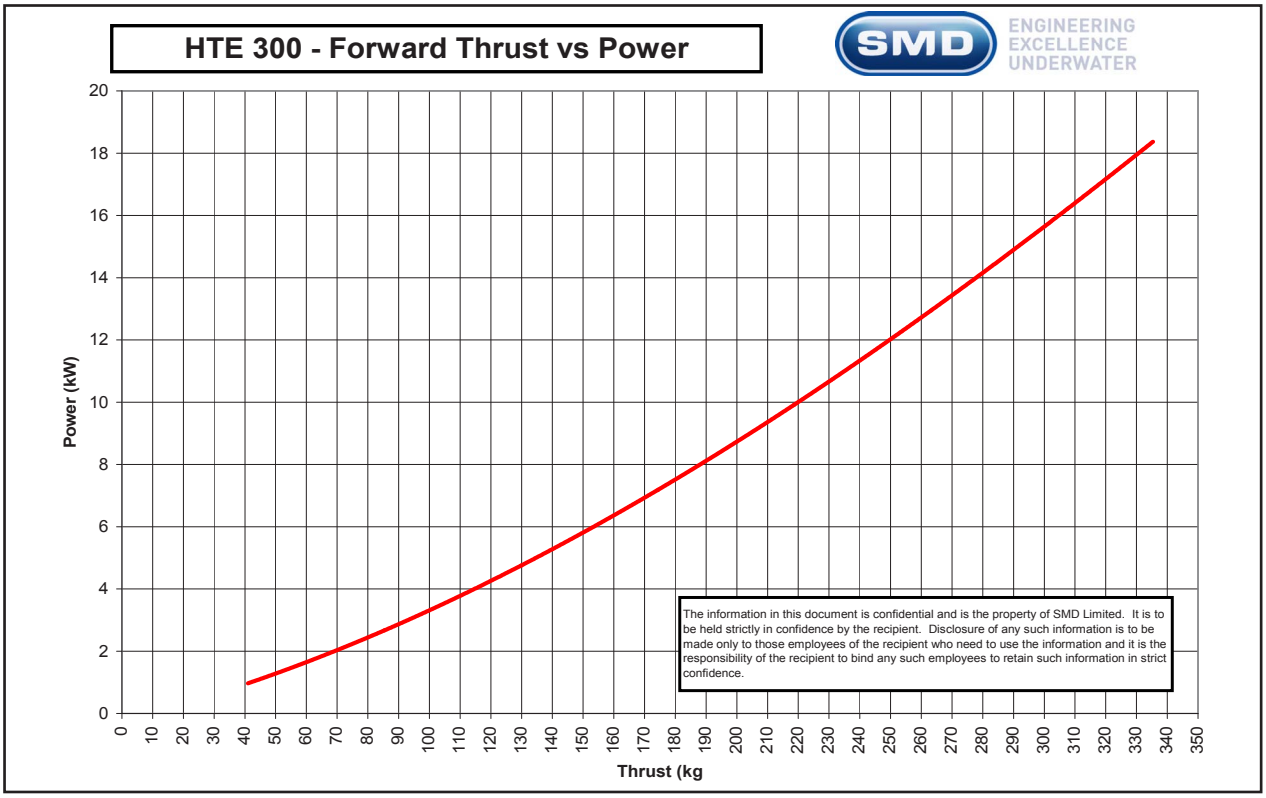

Figure 3 - Thruster Performance (Power vs. Thrust)

Confidential, copyright property of Soil Machine Dynamics Limited. All rights reserved.

SPECIFICATION

General	
Part number	HTE_300BA-32MK2
Description	Hydraulic Thruster c/w Rexroth Motor
Hydraulic Motor Manufacture	Rexroth (SMD Part Number AA7773)
Motor Type	Fixed displacement Motor 32cc Splined Shaft
Displacement	32cc/rev
Dimensions	
Propeller Diameter	310mm
Dimensions	Refer to Figure 4 - Thruster Dimensions and latest GA drawing
Weight	In Air 18.0 kg
	In Seawater 9.0 kg
Connection	
Motor Connections	Supply/Return lines ½” BSPP
Case Drain Connection	¼” BSPP
Bearing Housing Connection	1/8” BSPP
Pressure	
Pressure	Continuous 300 bar
	Intermittant 350 bar
Flow	Up to 50 LPM. Refer to Figure 2 - Thruster Performance (Pressure & Flow vs. Thrust)
Thrust	Refer to (Figure 2 - Thruster Performance (Pressure & Flow vs. Thrust) and Figure 3 - Thruster Performance (Power vs. Thrust)
Miscellaneous	
Hydraulic Oil Type	Mineral Oil, Shell Tellus or equivalent
	HEES Environmental Oil, Panolin Atlantis or Equivalent
Viscosity Range	6-300 centistokes at the fluid operating temperature (with 15-30 centistokes normally recommended)
Maximum Recommended Oil temperature	70°C
Mounting Method	Integrated Pedestal

Confidential, copyright property of Soil Machine Dynamics Limited. All rights reserved.

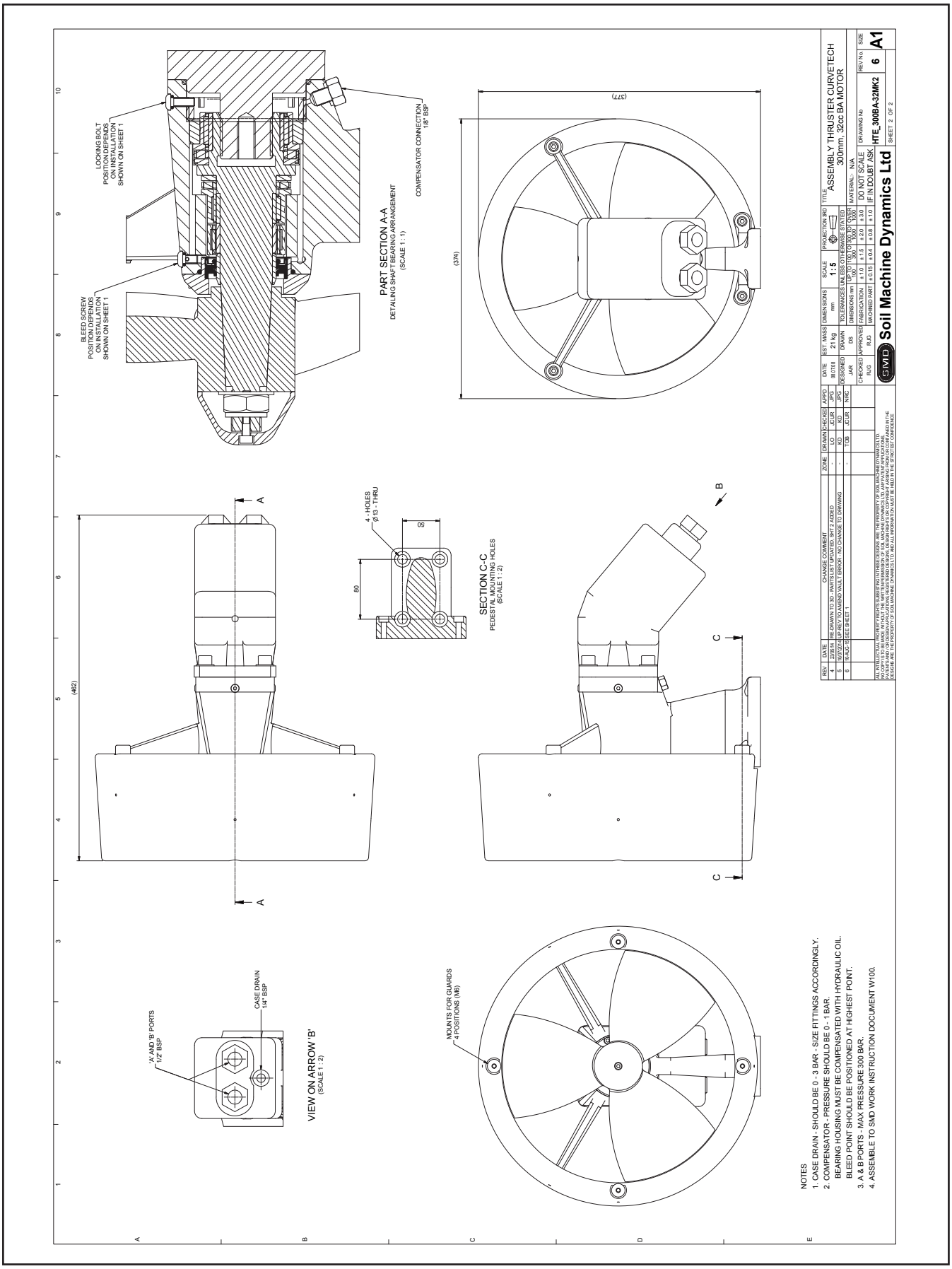

Figure 4 - Thruster Dimensions (extract from HTE_300BA-32MK2, Rev 6)

Confidential, copyright property of Soil Machine Dynamics Limited. All rights reserved.

INSTALLATION

THRUSTER MOUNTING

The thruster is mounted off the main pedestal base, refer to GA drawing.

The recommended fasteners for the pedestal base mounting are M12 or ½ inch 316 stainless steel bolts, washers and nyloc nuts tightened to a torque of 35 Nm.

Considerable force can be transferred from the thruster through the pedestal to the platform mounting brackets and the customer must ensure bracket is adequate.

MOTOR HYDRAULIC CONNECTIONS

Refer to the attached Nomograph (Figure 5 - Tube Size Selection By Velocity Vs. Flow Requirements) for selection of tube bore diameter of pressure lines. Thruster maximum flow should be identified from the performance data from Figure 1 - Thruster Performance (Pressure & Flow vs. Thrust). Oil velocity should be no more than 8m/s in the A/B pressure lines at full flow. Case drain lines should be 10mm (⅜”) minimum.

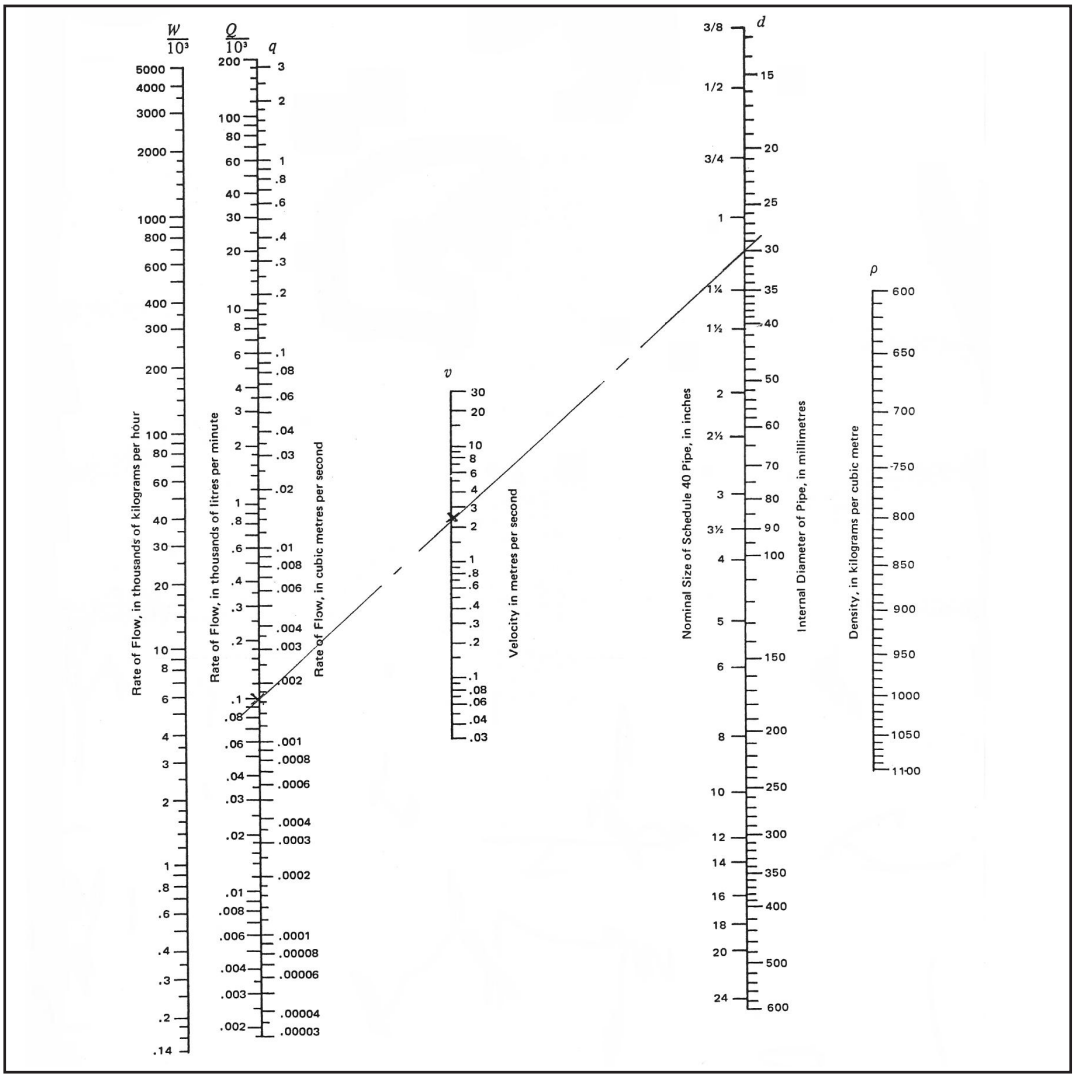

Figure 5 - Tube Size Selection By Velocity Vs. Flow Requirements

Confidential, copyright property of Soil Machine Dynamics Limited. All rights reserved.

SUPPLY/RETURN LINE CONNECTIONS

The 2 supply/return line ports are designed to mate with a BSPP fitting. The flange mating face dimensions are shown on GA Drawing.

Suitably pressure rated st/st hydraulic pipe or hydraulic hose can be used to connect to the motor. If pipe is used, considerable care must be taken in mounting the thruster to ensure vibration etc does not damage the pipe coupling. Hydraulic hose tails approximately 0.5m long are more convenient and overcome potential problems with direct hard piping. The hose should be routed to minimise the water flow restriction through the thruster. Hydraulic hose will reduce pressure spikes before they reach the motor and are flexible enough to allow service and bleeding of the motor and bearing housing by unbolting the thruster to align it for bleeding without disconnecting the supply/ return lines. This is useful for thrusters fitted in certain configurations.

CASE DRAIN CONNECTION

The case drain returns oil, which has leaked through the motor assembly, to the motor case. This oil must be returned to tank (LP reservoir) to ensure the case drain pressure remains below the motor return line pressure.

A ⅜ inch hydraulic hose should be used and connected to the case drain port on the motor. This hose should be a minimum of 0.5m long to match the main hoses and should be similarly routed to minimise water flow restriction through the thruster.

The standard motor shaft seal can accommodate up to 2.0 bar (29 psi) pressure from the case drain oil to the bearing housing oil and 0 bar pressure from the bearing housing oil to the case drain oil. Please contact SMD if alternative pressure rating is required.

The following considerations should be noted.

1. The drain line must be connected in a way, which ensures all air can be bled from the motor and hose.
2. For installations where the motor shaft is vertically mounted, the thruster should be bled to remove all air before mounting the thruster as it is very difficult to remove all air after the thruster is mounted.
3. There are special considerations associated with the case drain in multiple motor installations and the following should be addressed.

The case drains should not be commoned together unless the pipe is increased in size to take into account the extra flow from the additional case drains. Negligible backpressure at the case drain must be maintained.

Failure to comply introduces the possibility of pressurising a motor case to a level higher than return port pressure, which may result in the separation of the rotating assembly from the camplate, which will damage the motor. This could occur, for example, if the motor is unloaded whilst other motors in the system are functioning normally.

Confidential, copyright property of Soil Machine Dynamics Limited. All rights reserved.

BEARING HOUSING CONNECTION

The bearing housing must be oil filled for lubrication and pressure balance to the ambient pressure. In order to provide pressure balance with the ambient pressure the bearing housing oil feed must be connected to a hydraulic pressure compensator or to the hydraulic system reservoir, which should already be pressure balanced. This, results in the bearing housing pressure being at ambient plus the small pressure (typically 5-15 psi) generated by the pressure compensator.

As shown in Figure 4 - Thruster Dimensions, the bearing housing has a BSPP port, which can be used for the pressure balance connection. There are 4 additional ports to ensure that all air can be bled from the bearing housing prior to operation. This may take say 15 minutes and will be assisted by hand turning the propeller. The bleed point must be uppermost to ensure trapped air pockets are not created.

The recommended options of bearing housing pressure compensation are shown on Figure 6 - Option 1, Bearing housing lubrication branched from case drain & Figure 7 - Option 2, Separate Bearing Housing Lubrication Supply.

Option 1 (Figure 6 - Option 1, Bearing housing lubrication branched from case drain), shows the bearing housing connection branched from the motor case drain. This option has the advantage of low cost installation and negligible differential pressure across the motor shaft seal but the disadvantage of contamination of the main system hydraulics if the propeller shaft seal allows water ingress.

Option 2 (Figure 7 - Option 2, Separate Bearing Housing Lubrication Supply) shows the bearing housing separately compensated. Separate compensation can be either an individual compensator for each thruster or a single compensator commoned to each thruster bearing housing. This option has the advantage of no contamination of the main system hydraulics, if the propeller shaft seal allows water ingress, but the disadvantage of higher installation cost and the possibility of differential pressures between the motor case drain and the bearing housing which exceeds the rating of the motor shaft seal. If the motor shaft seal pressure is exceeded oil will flow between the bearing housing and motor case drain. The majority of our customers favour this option

As an aid to inspecting the condition of the bearing housing oil, the customer may consider fitting either clear hose or a viewing bowl to the line between the bearing housing and compensator. It is also recommended that a low-level alarm is fitted to the bearing housing compensator.

Confidential, copyright property of Soil Machine Dynamics Limited. All rights reserved.

THRUSTER SEALS

⚠ WARNING:

Only operate the thruster momentarily on deck as the thruster maximum rpm will be exceeded when operated off load (in air).

The thruster has rotary seals on the propeller shaft to seal between the seawater and the bearing housing oil and on the motor shaft to seal between the bearing housing oil and motor case drain oil.

Static seals are also fitted to the bearing housing ports, the bearing housing seal retainer, the bearing housing and motor interface, the motor main and case drain ports, the motor backplate and the motor valve block blanking plates. The locations of seals are shown in GA drawing.

The propeller shaft rotating seal arrangement is shown in GA drawing. It consists of a PTFE seal facing towards the seawater and a nitrile lip seal facing towards the bearing housing oil. The seals are mounted back to back and run on the same seal ring mounted on the shaft. This provides a pressure rating of 2.5 bar (36 psi) from bearing housing to seawater and 10 bar (145 psi) from seawater to bearing housing.

⚠ CAUTION:

The void between the two back to back seals must be completely filled with grease to ensure no air is trapped between the seals.

The motor shaft seal consists of a single lip seal with backing washer which can accommodate zero pressure from the bearing housing to the motor case drain and 2 bar (29 psi) pressure from the motor case drain to the bearing housing.

An ‘O’-Ring is fitted to the motor backplate. A differential pressure of 2 bar (29 psi) across the ‘O’-Ring should not be exceeded. Options to the standard pressure rating of rotary seals and ‘O’-Rings are available. Contact SMD for details of the options available. Refer to section MAINTENANCE PROCEDURES, for guidance on changing seals.

Confidential, copyright property of Soil Machine Dynamics Limited. All rights reserved.

MAINTENANCE PROCEDURES

GENERAL MAINTENANCE

Inspection of the condition of the thruster should be performed between each deployment of the system. The following should be considered in association with the customer's standard inspection procedures:

- Pedestal fixing to the frame.
- Fatigue of brackets.
- Thruster fasteners secure.
- Damage to hoses/piping.
- Leaks/damage to hydraulic fittings.
- Compensator oil level.
- Physical damage to propeller, nozzle, etc.
- Leaks at seals.
- Excessive noise during operational test.
- Ensure all air is bled from the motor and bearing housing.
- Propeller shaft play.
- Damage to protective coatings.

HYDRAULIC MOTOR

Except for replacement of the thruster motor shaft seal, maintenance and repair by the customer is not recommended. A faulty unit should be returned to SMD as advised in section Service Returns Procedure.

BEARING HOUSING

Maintenance tasks on the bearing housing can be grouped into the following:

- Replacement of the Bearing Housing Shaft Seal.
- Replacement of the Bearing Housing Seals and Seal Ring.
- Replacement of Bearings Mounted in the Bearing Housing.

Bearing Life The bearing system is designed for in excess of 20,000 hours of continual operation. Water ingress, contamination and external mechanical force on the shaft can significantly reduce this life. It is suggested all bearings are replaced after 4000 hours of operation.

Shaft Seal Life It is recommended the shaft seals and seal wear ring are replaced after 1000 hours of operation. The seal ring is part of the shaft assembly but is identified in the parts list under consumable spares and tools.

Confidential, copyright property of Soil Machine Dynamics Limited. All rights reserved.

BEARING HOUSING SHAFT SEAL REPLACEMENT

The replacement of bearing housing shaft seals requires a seal kit. See accessories section. Seals can typically be replaced with the thruster mounted on the vehicle. If the seal wear ring is to be replaced go to the next procedure.

- Refer to GA drawing, Figure 8 - Thruster Propeller Removal, Figure 9 - Thruster Removal & fittings of seals & Figure 10 - Thruster Seal Ring Removal & Replacement)

1. Remove the propeller cap and fixing nut (Items 7, 8, 6, 4, 5).
2. Using the propeller puller bar tool (OV 3047) draw the propeller (3/2) from the shaft (2/8) and remove the key (3/1).
3. Verify the bearing housing compensator has been drained.
4. Remove the seal retainer (2/3) by removing the screws (2/6) and washers (2/7) and jacking the seal retainer (2/3) from the bearing housing using the screw's (2/6) in the threaded holes of the seal retainer (2/3).
5. Inspect the seal ring (2/8/4) for wear. If grooves have formed on the ring it is recommended the seal ring is replaced as described in the following sections.
6. If the seal ring is not worn take items 2/2/61, 2/2/62, 2/2/13 and 2/3 to a work bench to replace the seals.
7. Hold seal ring lightly in a vice and tap out old seals using a soft hammer and tool. Remove old hydraulic sealant and other residue.
8. Lightly smear hydraulic sealant on the outer ring of the PTFE seal (2/2/62) and the seal mounting area of the seal retainer. Using the insertion tool (OV 3050) and a vice push the PTFE seal (2/2/62) correctly orientated, fully into the seal retainer. Remove excess hydraulic sealant with a clean cloth.
9. Pack the back face of the PTFE seal with seawater resistant grease (typically Advanced Lubrication SW2 grease). Ensure all air pockets are removed.
10. Push the lip seal (2/2/61) correctly orientated against the PTFE seal as shown. Use the tool (OV 3050) and a vice to push the lip seal fully home against the PTFE seal.
11. Remove excess grease with a clean cloth and smear extra grease to fill all voids on the inner face of both seals. Ensure adequate grease, so no air pockets will remain when the seals are pushed onto the shaft seal ring.
12. Replace 'O' ring (2/2/13) fitted to the seal retainer and return to the thruster.
13. Gently align the screw holes of the seal retainer with the bearing housing threads and evenly push the lip seal onto the seal ring.
14. Fit the washers and screws (2/6, 2/7) and evenly screw the seal retainer to the bearing housing.
15. Replace the propeller key (3/2), propeller (3/1), washer (5) and nut (4).

(Continued on next page)

Confidential, copyright property of Soil Machine Dynamics Limited. All rights reserved.

16. Replace the propeller cap (6, 8, 7)
17. Ensure the following:

Fastener Torque:	Nm	lb f ft
Item 7	6	4
Item 9/2	50	35
Item 4	50	35
Item 11	8	5.5
Pedestal Mounting Bolts	85	60

Table 1 - Fastener Torque

18. Complete thruster assembly, check assembly is mechanically secure and shaft rotation is satisfactory.

BEARING HOUSING SEALS AND SEAL RING REPLACEMENT

For replacement of the seal ring it is necessary to remove the thruster pedestal / bearing housing and the thruster motor for maintenance in the workshop. If the motor is connected using flexible hose the motor can be left connected to the vehicle if desired.

- Refer to GA drawing, Figure 8 - Thruster Propeller Removal, Figure 9 - Thruster Removal & fittings of seals & Figure 10 - Thruster Seal Ring Removal & Replacement.

1. Remove the propeller cap and fixing nut (Items 7, 8, 6, 4, 5).
2. Using the propeller puller bar tool (OV 3047) draw the propeller (3/2) from the shaft (2/8) and remove the key (3/1).
3. Verify the bearing housing compensator has been drained.
4. If the motor is to stay attached to the vehicle, remove the screws, spring washers (9/2, 9/3) holding the motor to the bearing housing.
5. Pull the motor (9/1) apart from the bearing housing and remove the ‘O’ ring (2/2/12).
6. If the motor is to be left attached to the bearing housing, note the orientation of the motor ports and mark hoses and ports for re-connection. Drain the main system reservoir before disconnecting the main and case drain hoses.
7. Remove the seal retainer (2/3) by removing the screws (2/6) and washers (2/7) and jacking the seal retainer (2/3) from the bearing housing using the screw’s (2/6) in the threaded holes of the seal retainer (2/3).

SEAL REPLACEMENT

1. Hold seal ring lightly in a vice and tap out old seals using a soft hammer and tool 3. Remove old hydraulic sealant and other residue.
2. Lightly smear hydraulic sealant on the outer ring of the PTFE seal (2/2/62) and the seal mounting area of the seal retainer. Using the insertion tool (OV 3050) and a vice push the PTFE seal (2/2/62) correctly orientated, fully into the seal retainer. Remove excess hydraulic sealant with a clean cloth.

Confidential, copyright property of Soil Machine Dynamics Limited. All rights reserved.

3. Pack the back face of the PTFE seal with seawater resistant grease (typically Advanced Lubrication SW2 grease). Ensure all air pockets are removed.
4. Push the lip seal (2/2/61) correctly orientated against the PTFE seal as shown. Use the tool (OV 3050) and a vice to push the lip seal fully home against the PTFE seal.
5. Remove excess grease with a clean cloth and smear extra grease to fill all voids on the inner face of both seals. Ensure adequate grease, so no air pockets will remain when the seals are pushed onto the shaft seal ring.
6. Replace ‘O’ ring (2/2/13) fitted to the seal retainer and return to the thruster.

SHAFT WEAR RING REPLACEMENT

1. If the motor is attached, remove the screws, spring washers (9/2, 9/3) holding the motor to the bearing housing.
2. Pull the motor (9/1) apart from the bearing housing and remove the ‘O’ ring (2/2/12).
3. Remove the rear, bearing retainer (2/9) by removing the long bleed screw (2/11) and unscrewing the retainer (2/10).
4. Pull the shaft out from the rear of the bearing housing and remove the thrust washer and roller bearing (2/4)
5. Take the shaft and slide the collar retainer (DI 3402) over the seal ring (2/8/4). Fit the seal ring removal collars (tool 4) to the seal ring with the lip engaged between the seal ring and the adjacent bearing inner ring. Slide the collar retainer over the removal collars.
6. Using the seal ring puller (OV 3046) pull the seal ring off by placing the puller legs behind the collar retainer and the jacking screw against the propeller end of the shaft.
7. Clean the shaft thoroughly and de-grease to remove all sealant or other residue from the area of the seal ring.
8. Apply LOCTITE 601 or equivalent retaining compound to the shaft where the seal ring will fit.
9. Fit the seal ring insertion collars (tool 6) to the new seal ring (2/8/4) and slide the collar retainer (tool 5) over the insertion collars.
10. Slide the new seal ring and tools onto the taper end of the shaft.
11. Verify new seal ring (2/8/4) orientation is correct with largest chamfer at the propeller end of the shaft..
12. Fit the spline peg (tool 7) to the spline of the shaft.
13. Fit the seal ring puller legs behind the collar retainer and position the puller screw against the shaft spline peg.
14. Draw the new seal ring up the shaft using the puller ensuring the seal ring moves evenly on the shaft until the seal ring butts against the bearing inner ring.
15. Remove all tools from the shaft, clean all residue and inspect the new assembly.

Confidential, copyright property of Soil Machine Dynamics Limited. All rights reserved.

REASSEMBLY

- Refer to GA drawing, Figure 8 - Thruster Propeller Removal, Figure 9 - Thruster Removal & fittings of seals & Figure 10 - Thruster Seal Ring Removal & Replacement.

Ensure the following during assembly, which is the reverse of the disassembly procedure:

1. New ‘O’ rings (2/2/12, 2/2/13) fitted.
2. No air is trapped in the area between the 2 shaft seals and the seal ring.
3. Complete thruster assembly is mechanically secure and shaft rotation is satisfactory.

REPLACE THRUSTER BEARINGS

- Refer to GA drawing.

It is recommended that a bearing housing with worn or corroded bearings should be replaced with a new bearing housing assembly and the old unit returned to SMD for refurbishment.

If it is impractical to return the assembly, the customers engineering workshop should replace the bearings considering the following:

1. Manufacture suitable removal & insertion tools for use with a hand or hydraulic press.
2. Ensure housing & shaft, are cleaned prior to fitting new bearing rings/bearings.
3. Install bearings with a suitable bearing fit compound.

STORAGE

Thrusters are shipped assuming they will be fitted to a system within 12 weeks. This assumes no extraordinary storage conditions as no special precautions are taken for long term storage.

If the thruster is to be stored for longer than 12 weeks, the customer should fill the motor and bearing housing with hydraulic oil. The propeller should be rotated by hand every month. If the thruster is stored for more than 12 months it is advised the rotary seals be replaced prior to operation.

Confidential, copyright property of Soil Machine Dynamics Limited. All rights reserved.

ACCESSORIES

Guard.
AH5022.

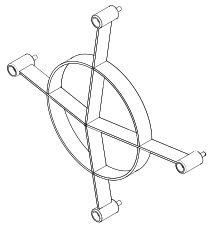

Seal Kit.
HTE_300BA-SP1.
Kit contains all seals required for thruster rebuild.
(Common to 300, 380, 390 and 430 Thrusters).

P/N	QTY
OR_1211	4 Off
OV_3024	1 Off
OV_3036	1 Off
OV_3037	1 Off
PK0219	1 Off

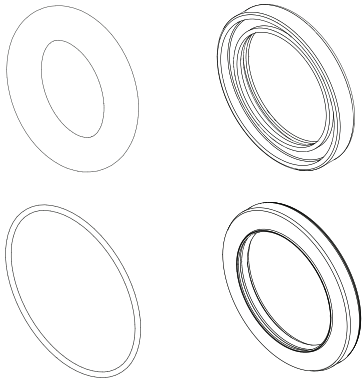

Reference Images

Bearing Kit.
HTE_300BA-SP2.
Kit contains all bearings and seal ring required for thruster rebuild.
(Common to 300, 380, 390 and 430 Thrusters).

P/N	QTY
OV_3006-2	1 Off
OV_3015	1 Off
OV_3016	1 Off
OV_3017	2 Off
OV_3115	1 Off
OV_3116	1 Off

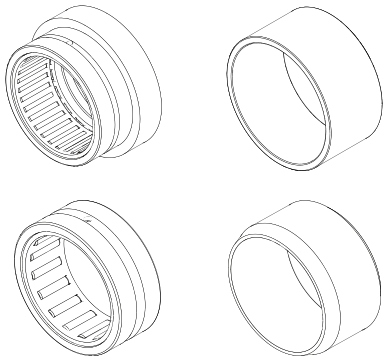

Reference Images

Thruster Maintenance Tool Kit.
HTE_300BA-SP3.
(Common to 300, 380, 390 and 430 Thrusters).

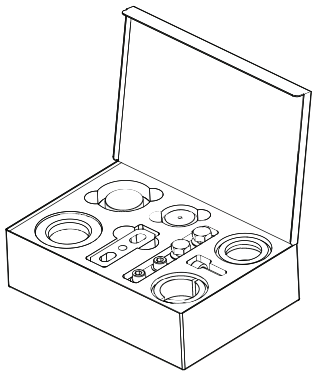

Confidential, copyright property of Soil Machine Dynamics Limited. All rights reserved.

SERVICE AND SPARE PARTS

SERVICE RETURNS PROCEDURE

- The thruster should be suitably packaged and returned to SMD freight-paid, after advising SMD of the required service work.
- A maintenance/failure report by the customer is required.
- A quotation for service/repair will be provided by SMD.
- An order to service/repair the unit is required before work can commence.

SPARE PARTS

Refer to the GA Drawing for part numbers. Ordering by SMD part number reduces the risk of wrong parts being provided.

DISTRIBUTORS

Contact SMD Limited for a current list of distributors:

Telephone:	++44 (0) 191 234 2222
Fax:	++44 (0) 191 234 8599
E-mail:	support@smd.co.uk
Web Site:	http://www.smd.co.uk
Address:	Soil Machine Dynamics Limited
	Turbinia Works
	Davy Bank
	Wallsend
	Tyne & Wear
	United Kingdom
	NE28 6UZ

SMD has a network of distributors that can provide in-field support for Curvetech Products in their relative areas.

Confidential, copyright property of Soil Machine Dynamics Limited. All rights reserved.

DRAWINGS

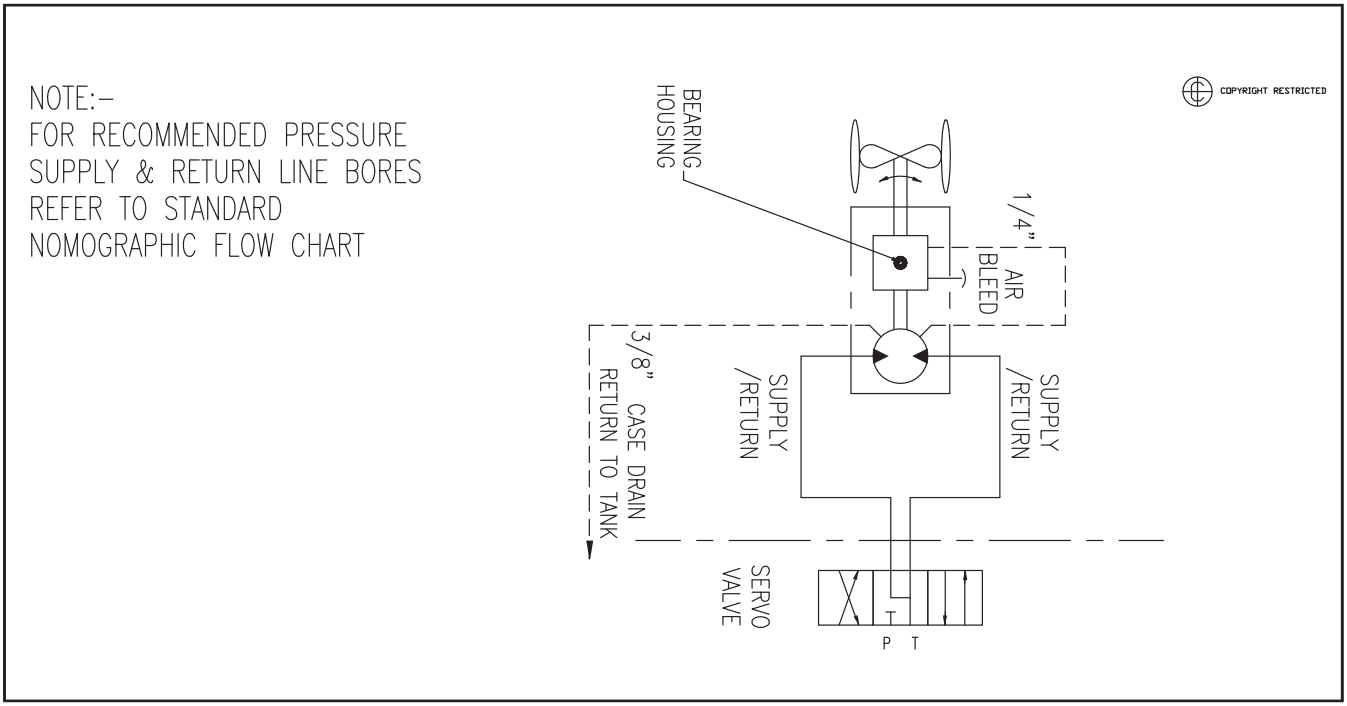

Figure 6 - Option 1, Bearing housing lubrication branched from case drain

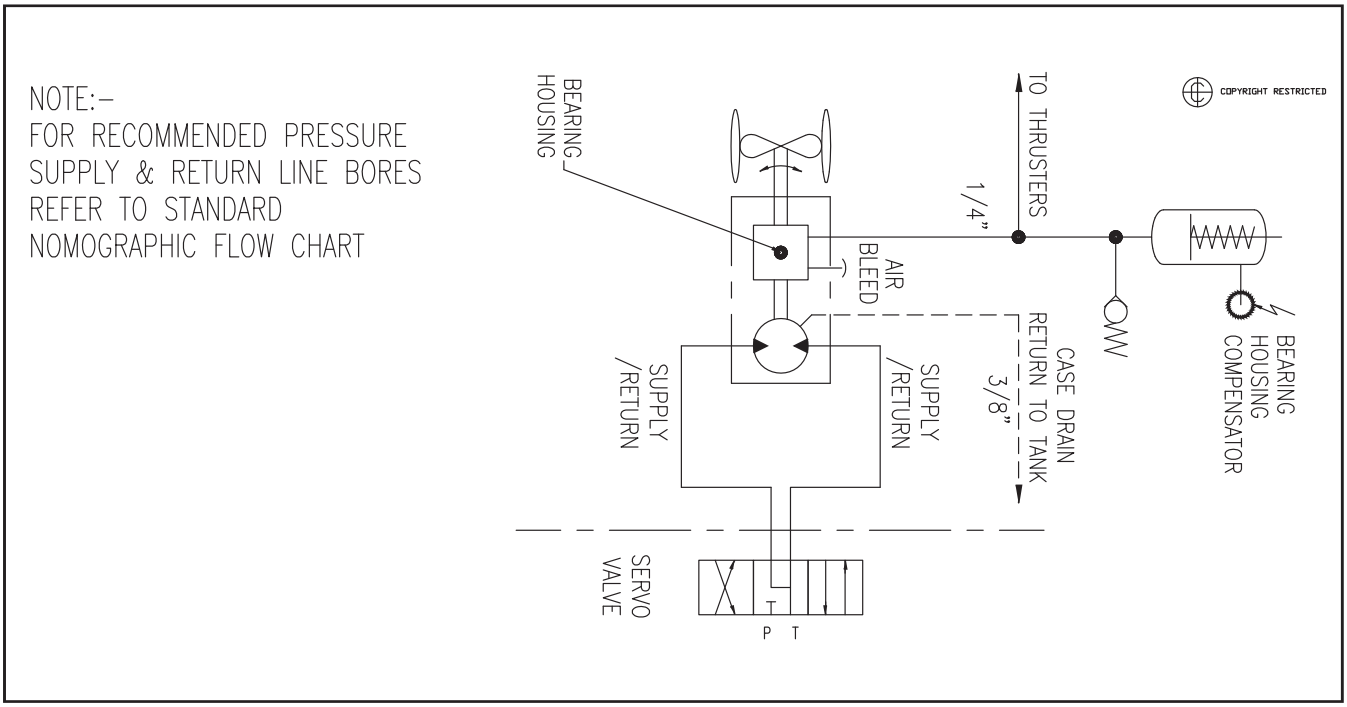

Figure 7 - Option 2, Separate Bearing Housing Lubrication Supply

Confidential, copyright property of Soil Machine Dynamics Limited. All rights reserved.

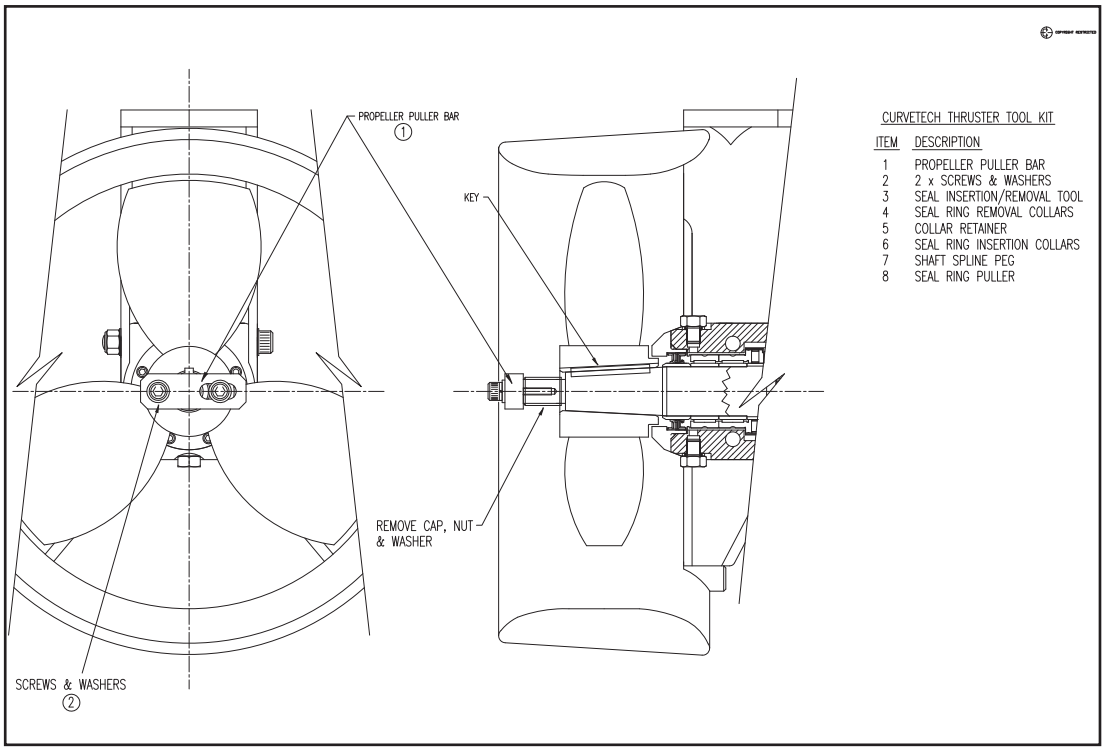

Figure 8 - Thruster Propeller Removal

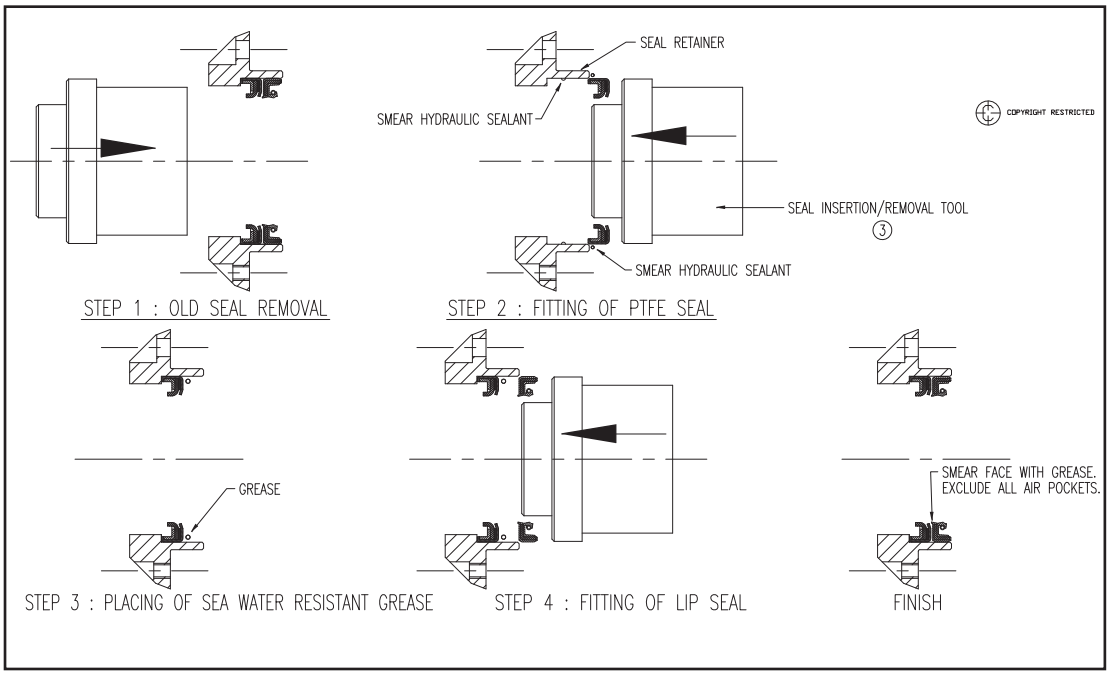

Figure 9 - Thruster Removal & fittings of seals

Confidential, copyright property of Soil Machine Dynamics Limited. All rights reserved.

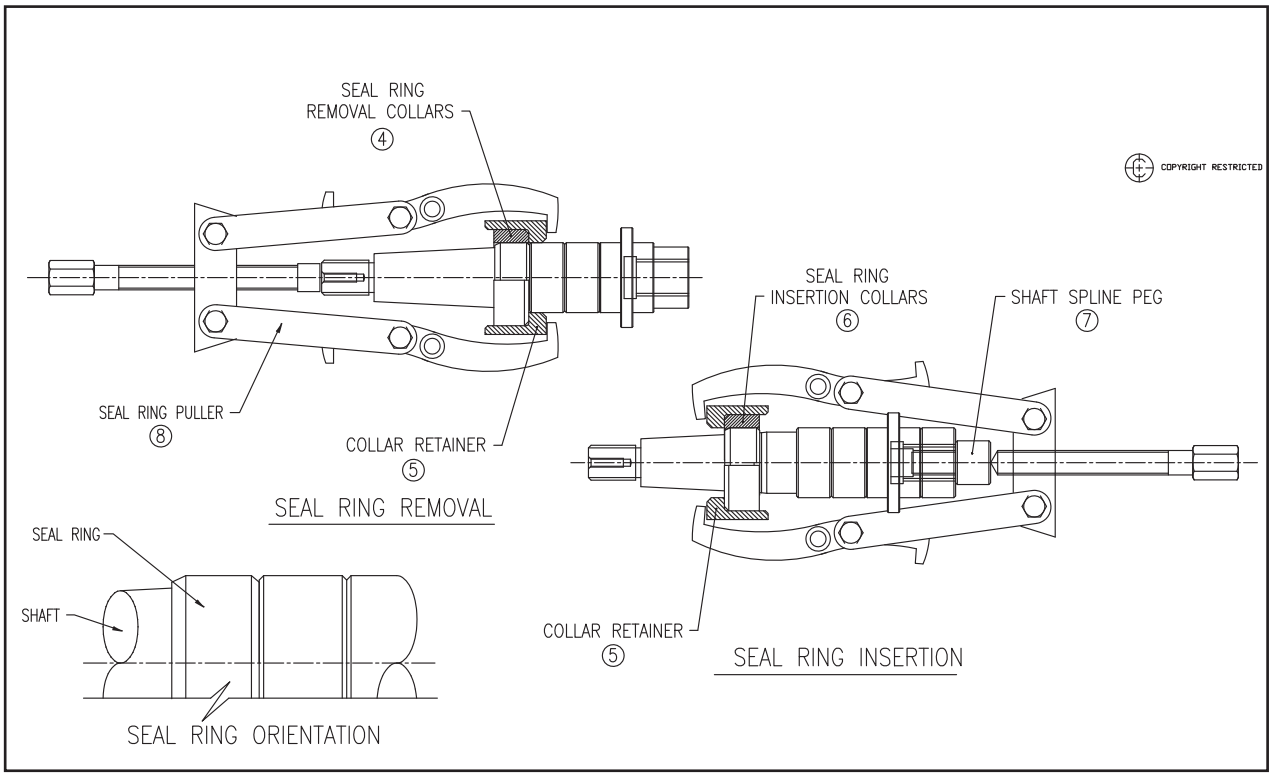

Figure 10 - Thruster Seal Ring Removal & Replacement

Confidential, copyright property of Soil Machine Dynamics Limited. All rights reserved.