QT400-600

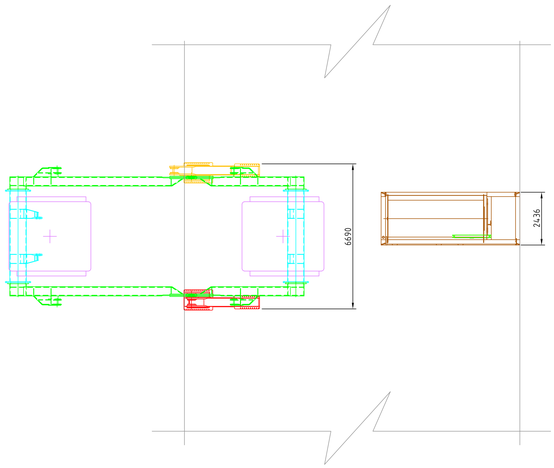

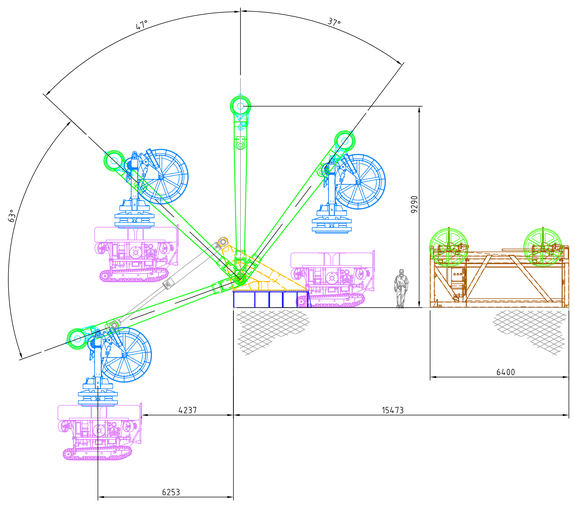

QT600-1000

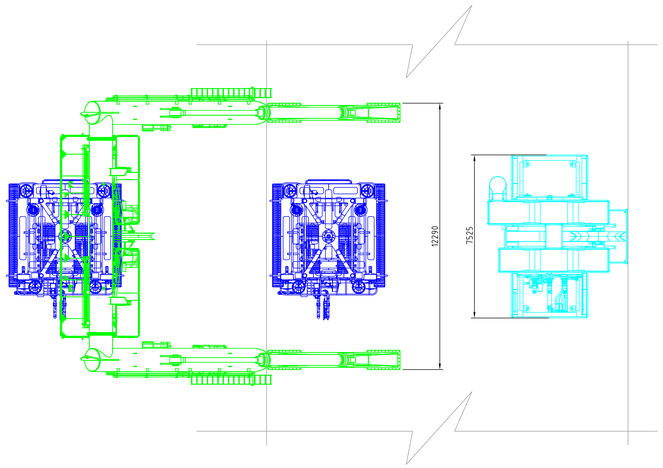

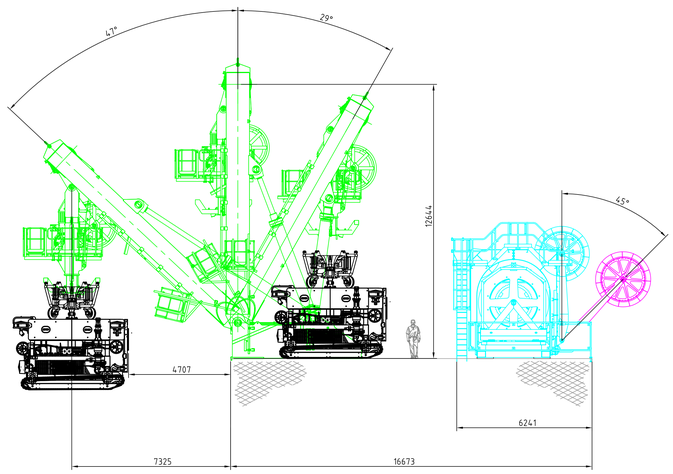

QT1400-1600

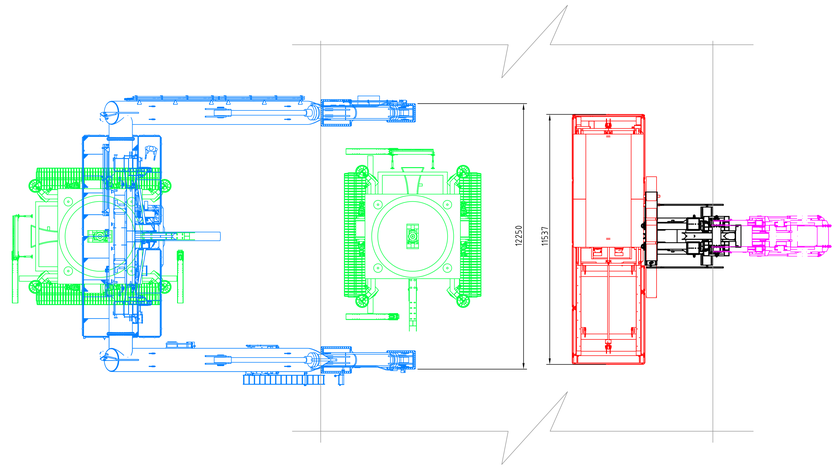

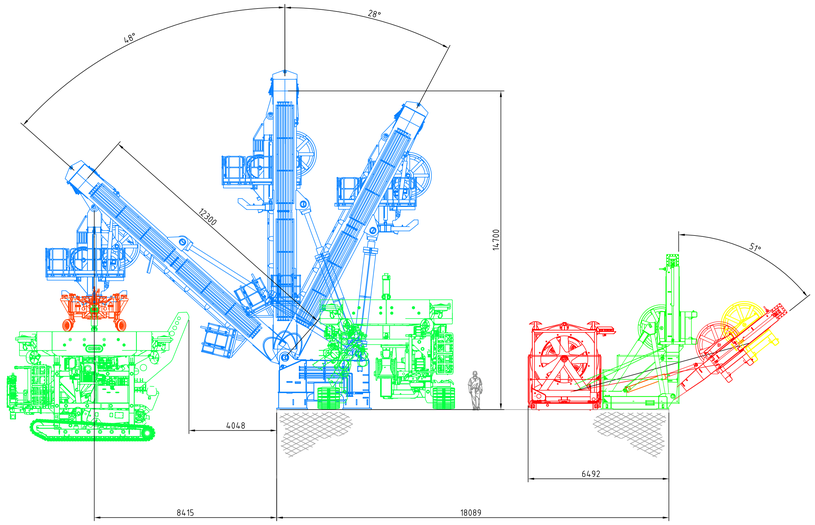

PRELIMINARY COPY

REV No	DATE	CHANGE	ZONE	DRAWN	CHECK	APPD

DATE	EST. MASS	DIMENSIONS	SCALE	PROJECTION 3RD
03-SEPT-12	N/A	mm	1:100	

DESIGNED	DRAWN
SMD	BH
CHECKED	APPROVED

TOLERANCES UNLESS OTHERWISE STATED

DIMENSION mm	UP TO 100	100 TO 300	300 TO 1000	OVER 1000
FABRICATION	± 1.0	± 1.5	± 2.0	± 3.0
MACHINED PART	± 0.15	± 0.4	± 0.8	± 1.0

MATERIAL :- N/A

DO NOT SCALE

IF IN DOUBT ASK

TITLE: Q.T SERIES MINIMUM REQUIRED DECK AREA

DRAWING NO. SD0114 | REV NO. 0 | SIZE A0

SHEET 1 OF 1

ALL INTELLECTUAL PROPERTY RIGHTS SUBSISTING IN THESE DESIGNS ARE THE PROPERTY OF SOIL MACHINE DYNAMICS LTD. NO COPY IS TO BE MADE WITHOUT THE WRITTEN PERMISSION OF SOIL MACHINE DYNAMICS LTD. ANY PATENT APPLICATIONS, PATENTS AND/OR DESIGN APPLICATIONS, REGISTERED DESIGNS, DESIGN RIGHTS OR COPYRIGHT ARISING FROM OR CONTAINED IN THE DESIGNS ARE THE PROPERTY OF SOIL MACHINE DYNAMICS LTD AND ALL INFORMATION MUST BE HELD IN THE STRICTEST CONFIDENCE.

SMD Soil Machine Dynamics Ltd