PARTS LIST			
ITEM	PART No	DESCRIPTION	QTY
1	AA3146	CONNECTOR MALE 1/8"NPT x 1/4" TUBE	1
2	AA3195	FITTING PLUG 1/4" SS A4 - SWAGELOK SS-400-P	1
3	AA7426	VALVE RELIEF 30psi (3/4"NPT)	1
4	AC9794	HOUSING UPPER - 6L COMPENSATOR	1
5	AC9795	FLANGE COUPLING UPPER - 6L COMPENSATOR	1
6	AC9796	FLANGE COUPLING LOWER - 6L COMPENSATOR	1
7	AC9798	BASE PLATE - 6L COMPENSATOR	1
8	AC9799	DIAPHRAGM - 6L COMPENSATOR	1
9	AD0293	CAP PLATE SENSOR HOUSING	1
10	AD0541	SEAL O-RING 41.5 x 3.0 NBR70	1
11	AD0710	PISTON - 6L COMPENSATOR	1
12	AD0713	RETAINER DIAPHRAGM - 6L COMPENSATOR	1
13	AD1227	SEAL O-RING / 6.99 x 196.22	2
14	AH5955	HOUSING LOWER - 3L COMP	1
15	AH5956	TIE BAR - 3L COMP	6
16	AH6123	HOUSING TRANSDUCER	1
17	AJ7205	LABEL CURVETECH LOGO (BLACK ON TRANSPARENT)	2
18	AJ7481	LABEL WARNING SPRING UNDER COMPRESSION	1
19	AJ8830	TOP PLATE - 3L / 6L COMPENSATOR - 5 x 9/16"-18 UNF PORTS	1
20	AJ8835	TRANSDUCER SENSOR; 119mm STROKE; SEACON 5507-1503; 4-20mA OUTPUT	1
21	AJ8836	LABEL 6L COMPENSATOR LEVEL	2
22	PA0078	NUT M6 NYLOC SS A2-70	24
23	PA0192	BOLT M6 x 25 SHCS SS A2-70	4
24	PA0546	WASHER M6 FLAT BS4320 FORM B SS A2	36
25	PB7913	SEAL O-RING 84.3 x 5.7	1
26	PB9837	BOLT M6 x 60 SHCS SS A2-70	12
27	PE1755	SEAL O-RING 74.5 X 3.0	1
28	VE_3092-2	SPRING RESERVOIR, 5 PSI	1

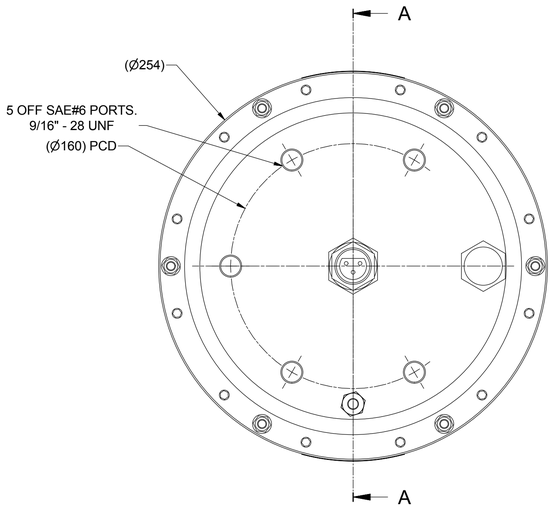

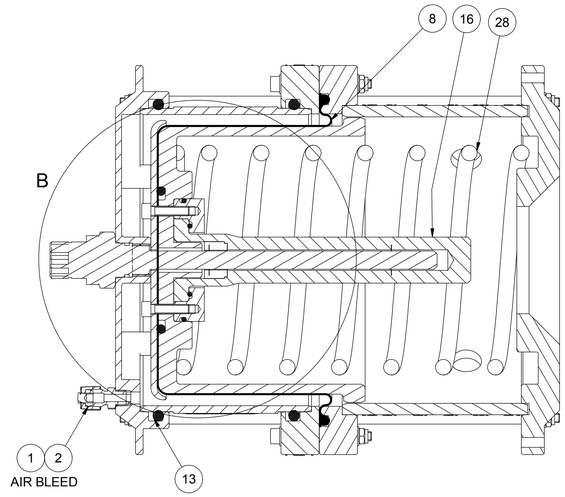

SECTION A-A

WARNING ! DANGER OF INJURY.

CARE MUST BE TAKEN WHEN FITTING OR REMOVING SPRING.
A HYDRAULIC PRESS WITH RELEVANT SAFETY FEATURES
SHOULD BE USED TO COMPRESS OR RELEASE THE SPRING.

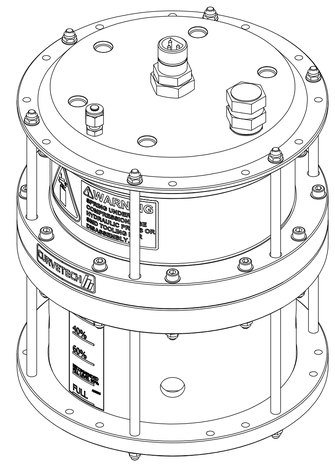

ISOMETRIC VIEW

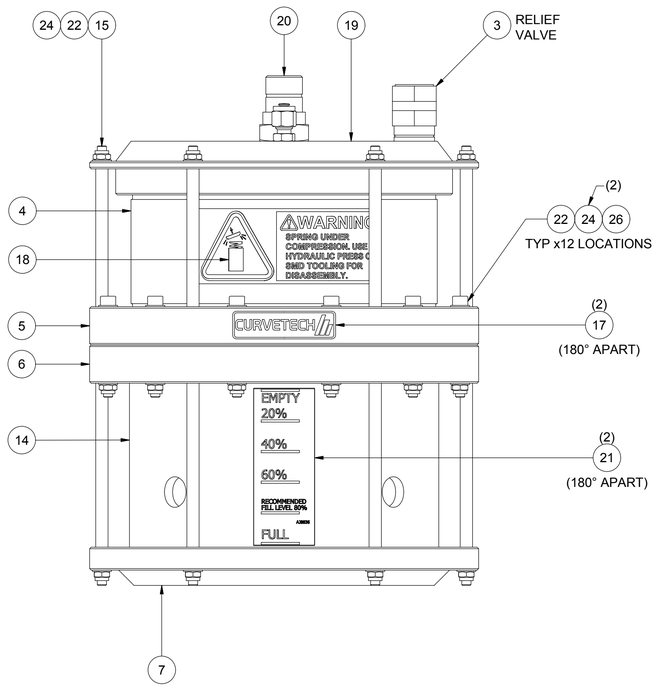

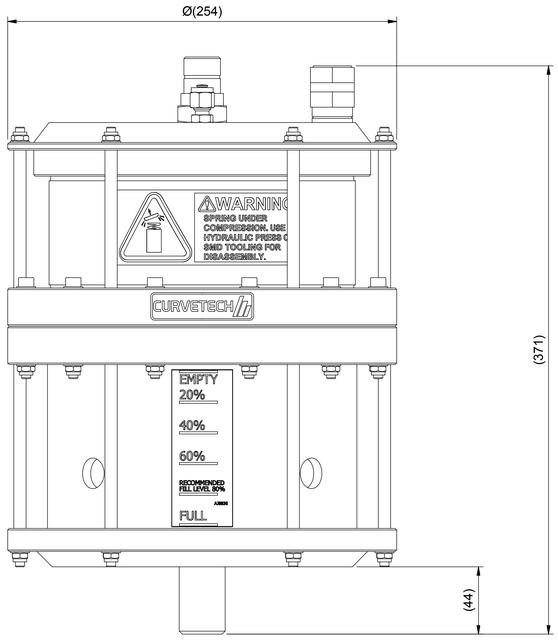

COMPENSATOR FULL
(MAX. DIMENSIONS)
SCALE 1 : 2

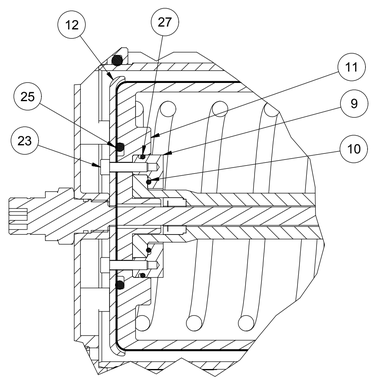

DETAIL B
SCALE 1 : 2

SPECIFICATION (ESTIMATE)		
WEIGHT	IN AIR	15 KG
	IN WATER	10 KG
VOLUME	FULL	3 L
	EMPTY	0 L / TRACE
PRESSURE	FULL	0.41 bar
	EMPTY	0.23 bar

TRANSDUCER - SEACON 5507-1503	
PIN	FUNCTION
1	0V - SUPPLY & SIGNAL
2	SIGNAL 4-20mA
3	+24V SUPPLY (16.5V TO 28V)

NOTES :-
1. ASSEMBLE IN ACCORDANCE WITH SMD SPECIFICATION W100.
2. APPLY MOLYKOTE GREASE ON 'O-RINGS' & APPLY AQUALUBE GREASE TO ALL THREADS.
3. BLANK ALL PORTS AFTER BUILD
4. IF IN DOUBT PLEASE ASK.

RELEASED FOR MANUFACTURE

REV	DATE	CHANGE COMMENT	ZONE	DRAWN	CHECKED	APPD

DATE	EST. MASS	DIMENSIONS	SCALE	PROJECTION 3RD
19/07/16	14 kg	mm	1 : 2	

DESIGNED	DRAWN
LO	LO
CHECKED	APPROVED
MvZ	MvZ

TOLERANCES UNLESS OTHERWISE STATED

DIMENSIONS mm	UP TO 100	100 TO 300	300 TO 1000	OVER 1000
FABRICATION	± 1.0	± 1.5	± 2.0	± 3.0
MACHINED PART	± 0.15	± 0.4	± 0.8	± 1.0

TITLE
ASSEMBLY COMPENSATOR
3L/3-6PSI/SEACON3/4-20mA/0

MATERIAL:- N/A

DO NOT SCALE
IF IN DOUBT ASK

DRAWING No: EV_4007-5
REV No.: 0
SIZE: A1
SHEET 1 OF 1

ALL INTELLECTUAL PROPERTY RIGHTS SUBSISTING IN THESE DESIGNS ARE THE PROPERTY OF SOIL MACHINE DYNAMICS LTD.
NO COPY IS TO BE MADE WITHOUT THE WRITTEN PERMISSION OF SOIL MACHINE DYNAMICS LTD. ANY PATENT APPLICATIONS,
PATENTS AND / OR DESIGN APPLICATIONS, REGISTERED DESIGNS, DESIGN RIGHTS OR COPYRIGHT ARISING FROM OR CONTAINED IN THE
DESIGNS ARE THE PROPERTY OF SOIL MACHINE DYNAMICS LTD. AND ALL INFORMATION MUST BE HELD IN THE STRICTEST CONFIDENCE

SMD Soil Machine Dynamics Ltd